Lerra PLUS

Construction guide

Lerra PLUS (Barrel 2.2x2.6 [8'-6 3/8"])

Compatible with both Front Glass Wall and Front Wooden Wall construction options, including Half panoramic and Panoramic construction.

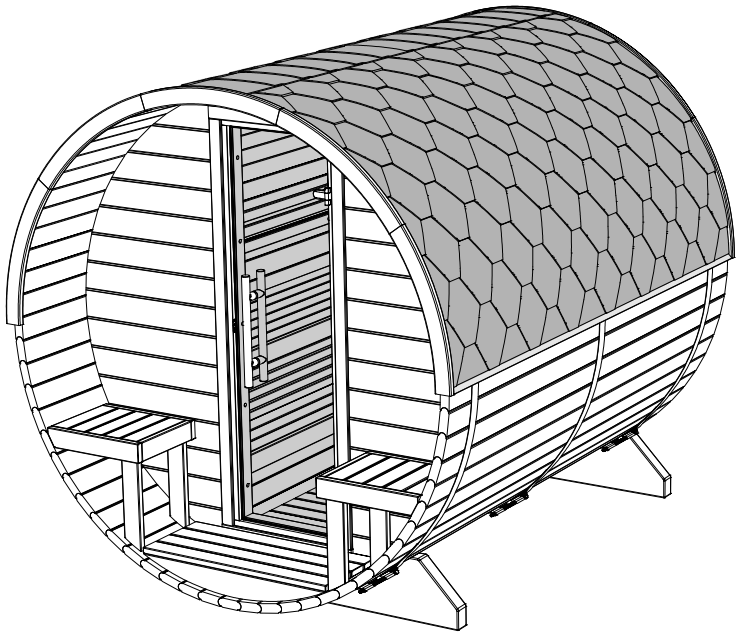

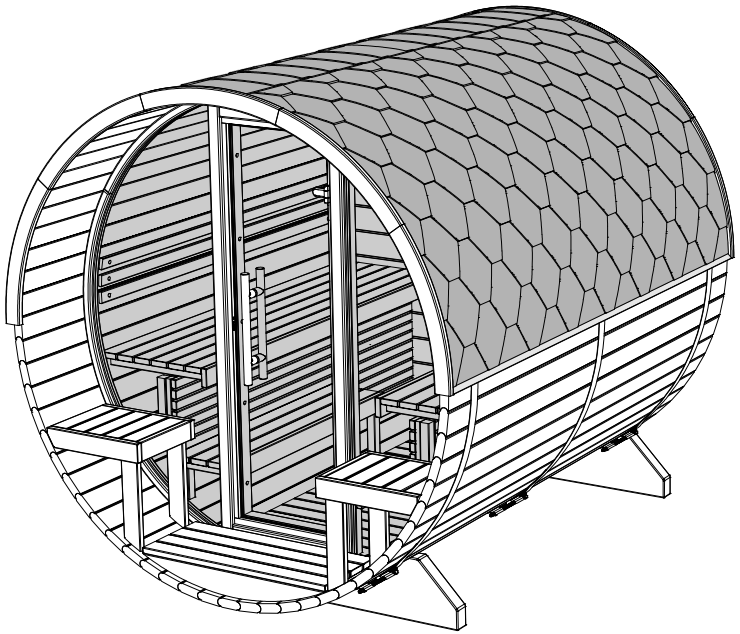

Read the manual and check the parts for completeness before assembly!

Images are illustrative and may differ from reality, the construction principle is the same!!!

Lerra SAUNA SERIES

CONTENTS

- Exterior construction (Drawing):
  - Lerra PLUS (Barrel 2.2x2.6 [8'-6 3/8"]) views
  - Lerra PLUS (Barrel 2.2x2.6 [8'-6 3/8"]) wall options
- Bench assembly (Drawing):
  - Lerra PLUS (Barrel 2.2x2.6 [8'-6 3/8"]) sectional views from inside
- Exterior construction (Detail list):
  - Detail list 1
  - Detail list 2
  - Detail list 3 (Optional)
  - Detail list 4
- Bench assembly (Detail list):
  - Detail list 5
  - Detail list 6
- Tools and materials:
- Exterior construction:
  - Floor construction and preparation . . . . . 1.1 - 1.5
  - Preparation of the walls . . . . . 2.1 - 2.5
  - Construction of walls . . . . . 3.1 - 3.8
  - Roof preparation and construction . . . . . 4.1 - 4.6
  - Installation of doors and vent covers . . . . . 5.1 - 5.3
- Bench assembly
  - Steam room (Wooden wall(s) with and without Half Panoramic wall) . . . . . 6.1.1 - 6.1.6
  - Steam room (Front Glass wall with and without Half Panoramic wall) . . . . . 6.2.1 - 6.2.7
  - Steam room (Front Wooden wall with Panoramic wall). . . . . 6.3.1 - 6.3.7
  - Bench backrests, floor grate and thermal plate . . . . . 7.1 - 7.2
  - Terrace (For Front Wooden wall and Front Glass wall) . . . . . 8.1 - 8.3

SAUNASELL

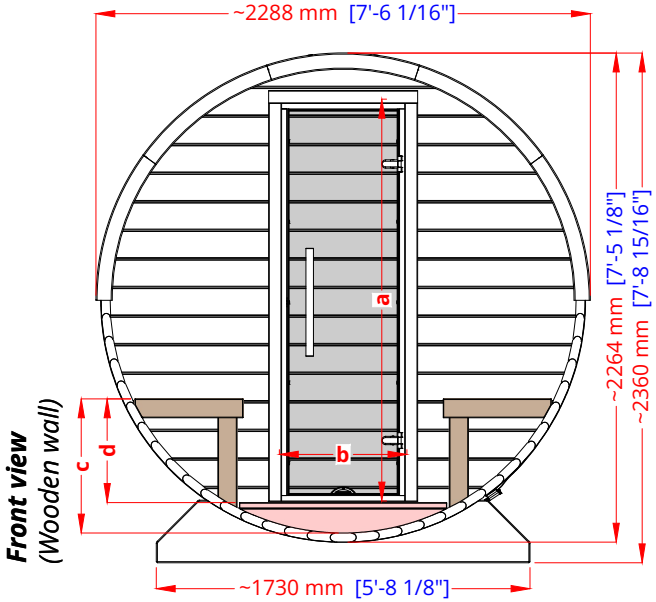

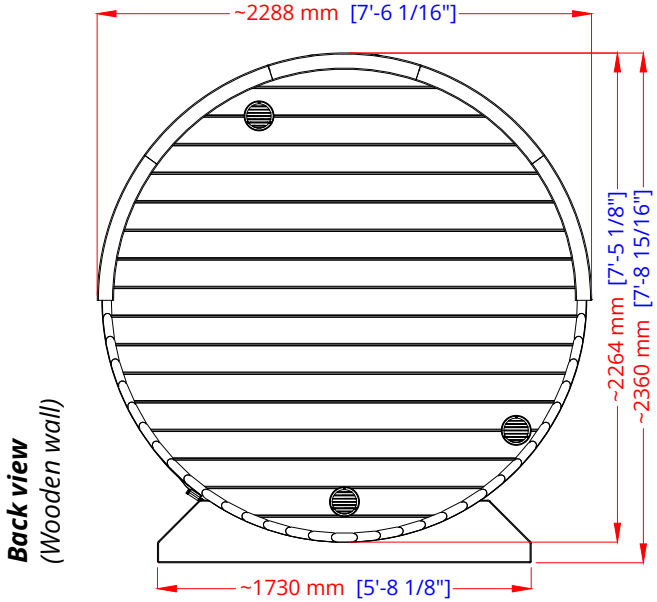

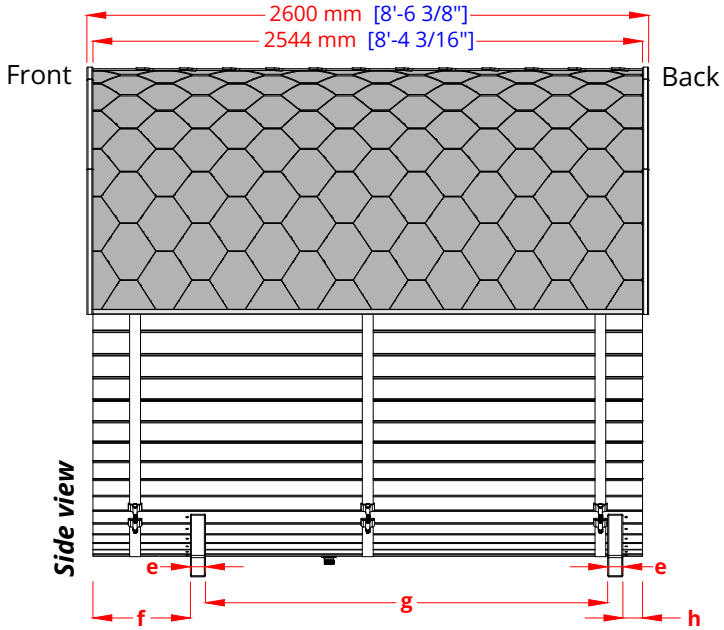

Dimensions and measurements		
a	1860 mm	~ 6'-1 1/4"
b	590 mm	~ 1'-11 1/4"
c	~621 mm	~ 2'-0 7/16"
d	~480 mm	~ 1'-6 7/8"
e	70 mm	~ 0'-2 3/4"
f	~451 mm	~ 1'-5 3/4"
g	~1862 mm	~ 6'-1 5/16"
h	~91 mm	~ 0'-3 9/16"

Lerra PLUS

(Barrel 2.2x2.6 [8'-6 3/8"])

views

Lerra SAUNA SERIES

SAUNASELL

Back wall options

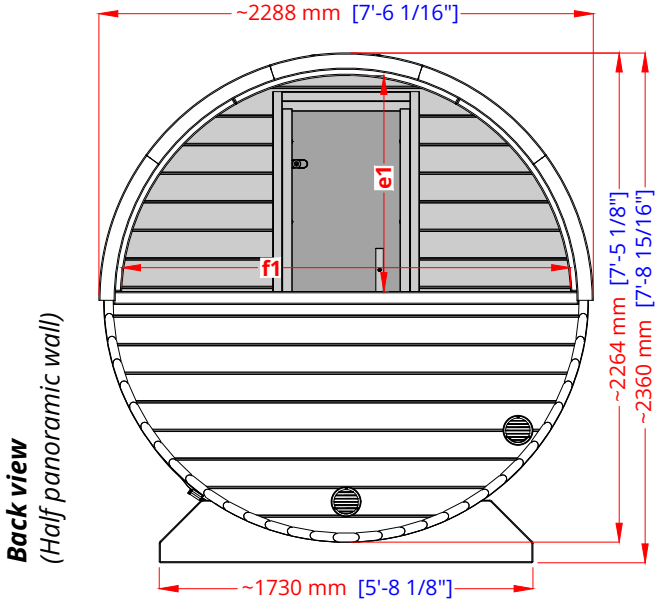

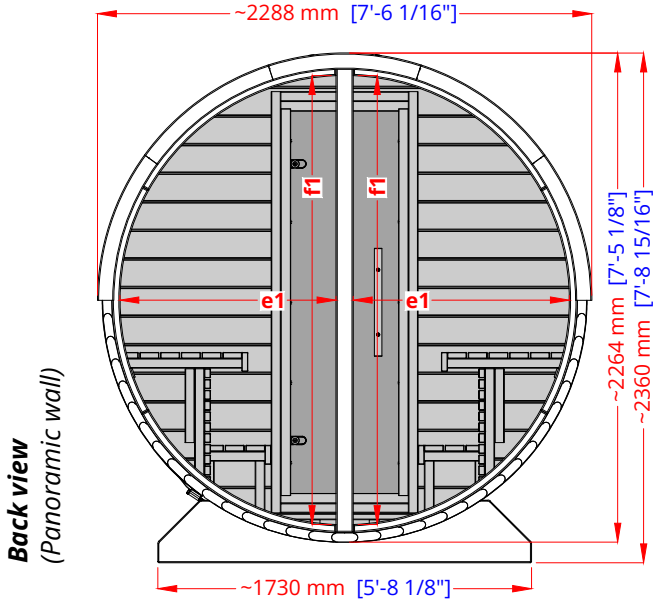

Front wall options

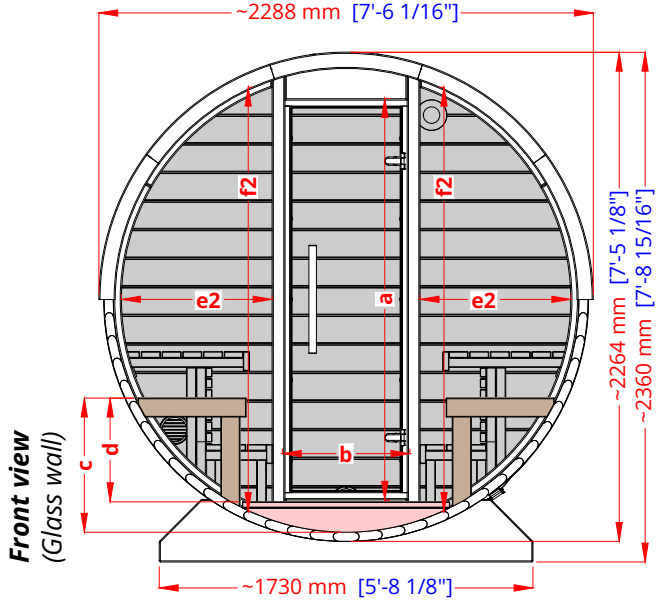

Dimensions and measurements		
a	1860 mm	~ 6'-1 1/4"
b	590 mm	~ 1'-11 1/4"
c	~621 mm	~ 2'-0 7/16"
d	~480 mm	~ 1'-6 7/8"
e1	~1000 mm	~ 3'-3 3/8"
e2	~698 mm	~ 2'-3 7/16"
f1	~2078 mm	~ 6'-9 13/16"
f2	~1964 mm	~ 6'-5 5/16"

Lerra PLUS

(Barrel 2.2x2.6 [8'-6 3/8"])

wall opitions

Lerra SAUNA SERIES

SAUNASELL

	Dimensions and lengths	
A1	70 mm	~0'-2 3/4"
A2	1960 mm	~6'-5 3/16"
A3	430 mm	~1'-4 15/16"
B1	~ 75 mm	~0'-2 15/16"
C1	590 mm	~1'-11 1/4"

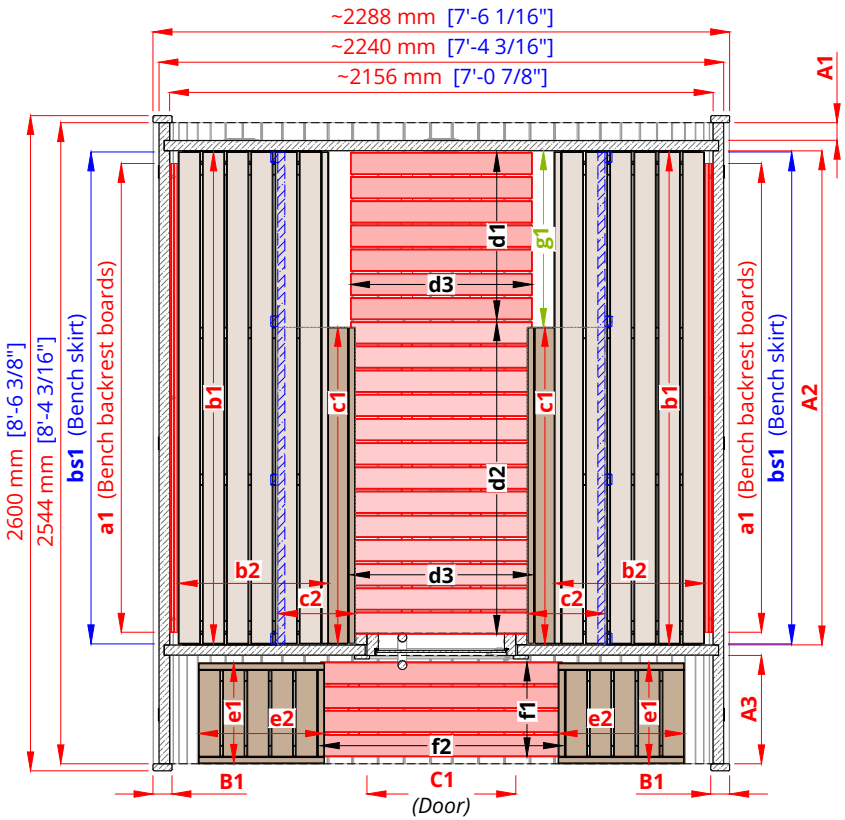

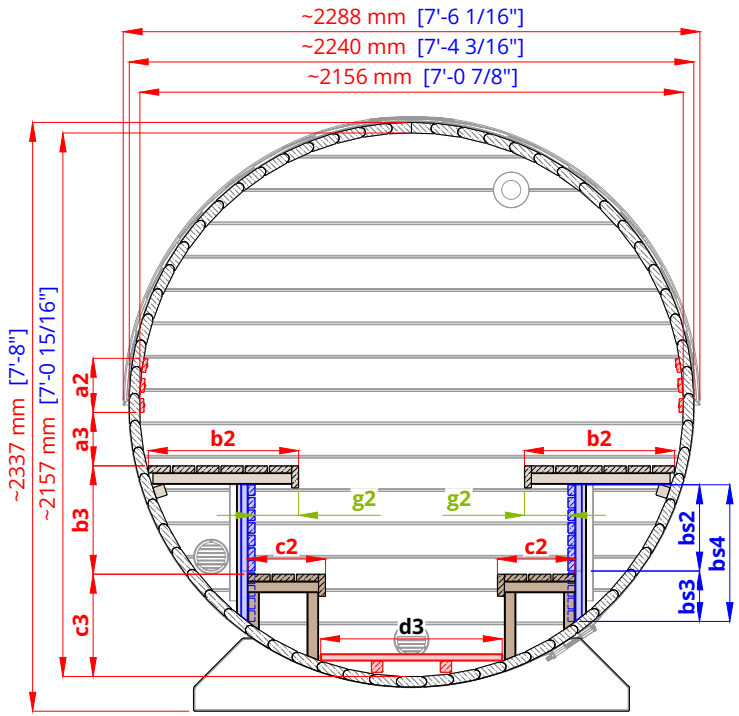

	Dimensions and lengths	
a1	1860 mm	~6'-1 1/4"
a2	~ 215 mm	~0'-8 7/16"
a3	~ 212 mm	~0'-8 5/16"
b1	1952 mm	~6'-4 7/8"
b2	~ 596 mm	~1'-11 7/16"
b3	430 mm	~1'-4 15/16"
bs1	1952 mm	~6'-4 7/8"
bs2	342 mm	~1'-1 7/16"
bs3	200 mm	~0'-7 7/8"
bs4	542 mm	~1'-9 5/16"
c1	1256 mm	~4'-1 7/16"
c2	308 mm	~1'-0 1/8"
c3	~ 406 mm	~1'-4"
d1	~ 664 mm	~2'-2 1/8"
d2	~ 1240 mm	~4'-0 13/16"
d3	~ 720 mm	~2'-4 3/8"
e1	400 mm	~1'-3 3/4"
e2	500 mm	~1'-7 11/16"
f1	376 mm	~1'-2 13/16"
f2	960 mm	~3'-1 13/16"
g1	700 mm	~2'-3 9/16"
g2	~ 173 mm	~0'-6 13/16"

Lerra SAUNA SERIES

Lerra PLUS

(Barrel 2.2x2.6 [8'-6 3/8"])

Sectional views from inside

SAUNASELL

** Depends on the wall options selected.*

Detail profiles

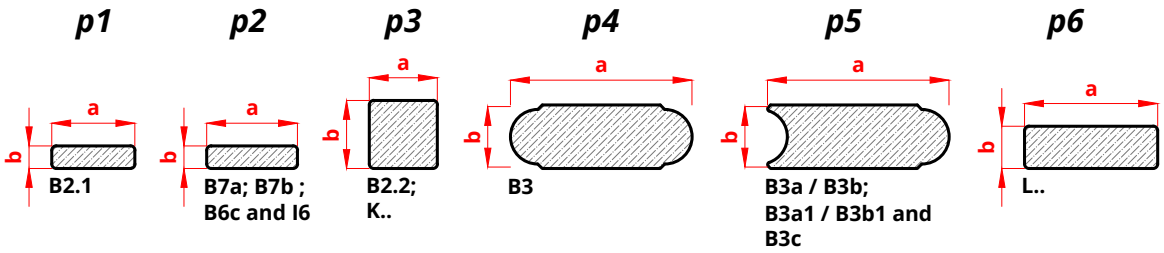

	a		b	
p1	~55 mm	~ 0'-2 3/16"	~15 mm	~ 0'-0 9/16"
p2	~60 mm	~ 0'-2 3/8"	~15 mm	~ 0'-0 9/16"
p3	~45 mm	~ 0'-1 3/4"	~45 mm	~ 0'-1 3/4"
p4	~120 mm	~ 0'-4 3/4"	~40 mm	~ 0'-1 9/16"
p5	~120 mm	~ 0'-4 3/4"	~40 mm	~ 0'-1 9/16"
p6	~88 mm	~ 0'-3 7/16"	~28 mm	~ 0'-1 1/8"

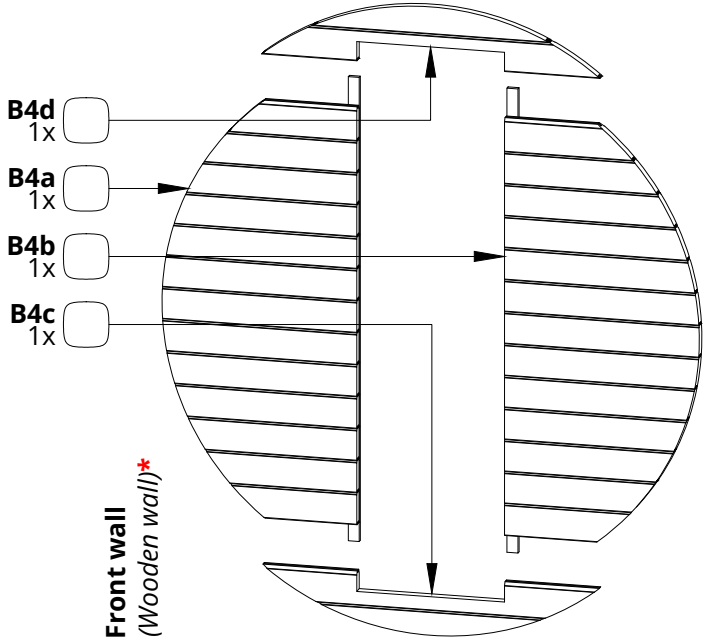

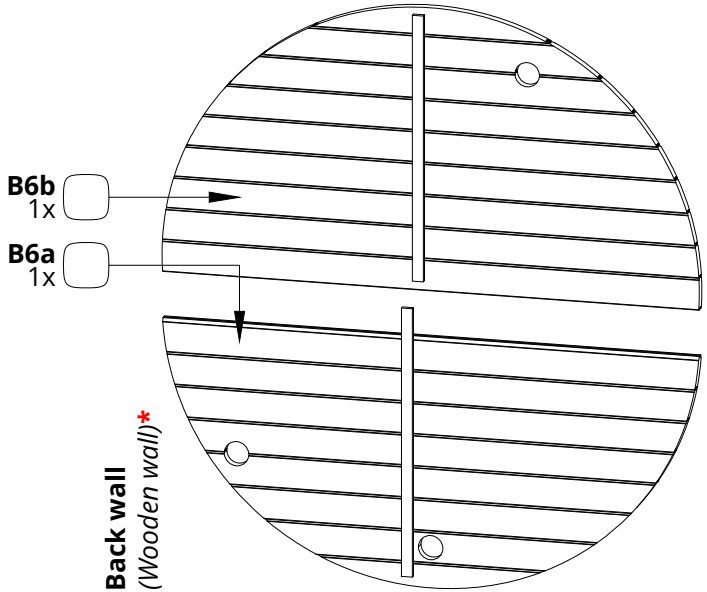

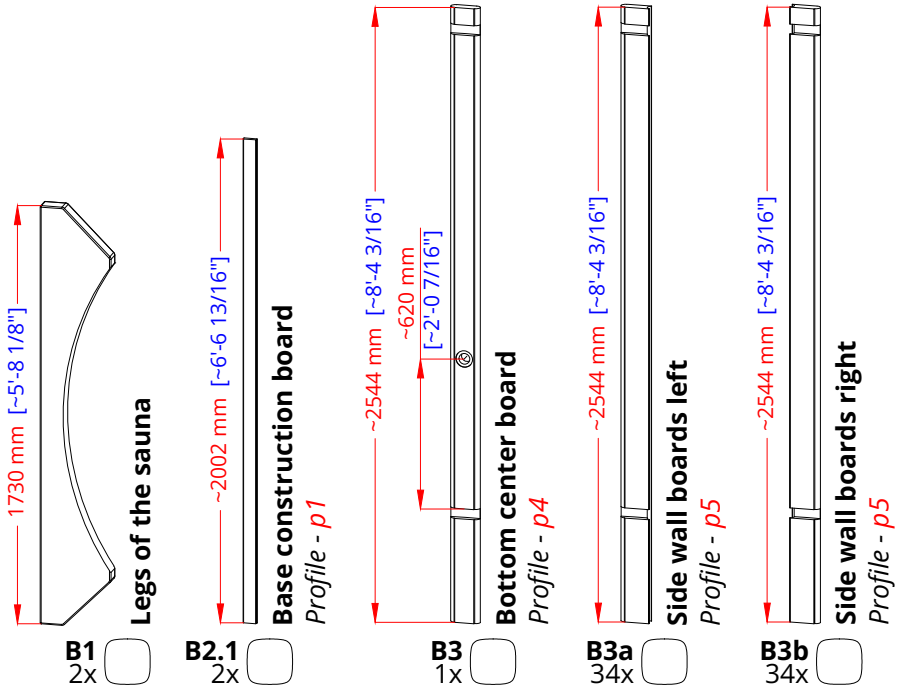

Lerra SAUNA SERIES

Detail list 1

Exterior construction

** Depends on the door (wall) options selected.*

Dimensions and lengths					
a	590 mm	~ 1'-11 1/4"	M1 - Length	~7.4 m	~ 24'-3 5/16"
b	1860 mm	~ 6'-1 1/4"	R1 - Length	~1.6 m	~ 5'-3"
c	~1840 mm	~ 6'-0 7/16"	R2 - Length	~2.54 m	~ 8'-4"
d	~690 mm	~ 2'-3 3/16"			

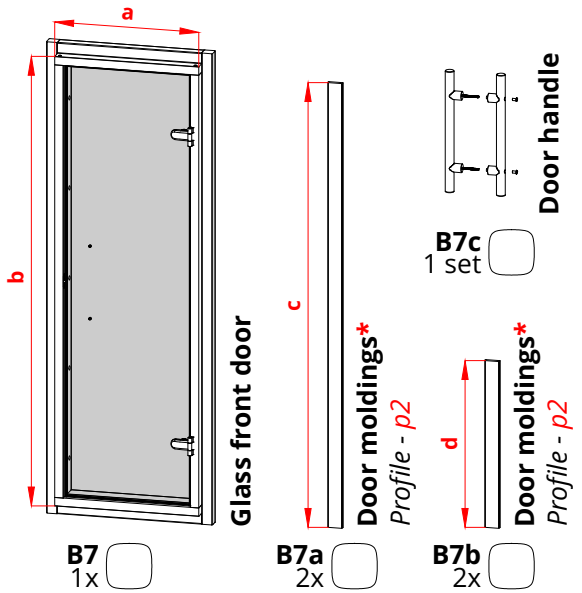

Wood protection and sealing materials

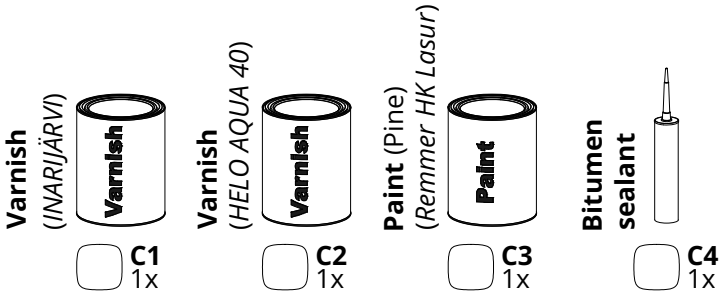

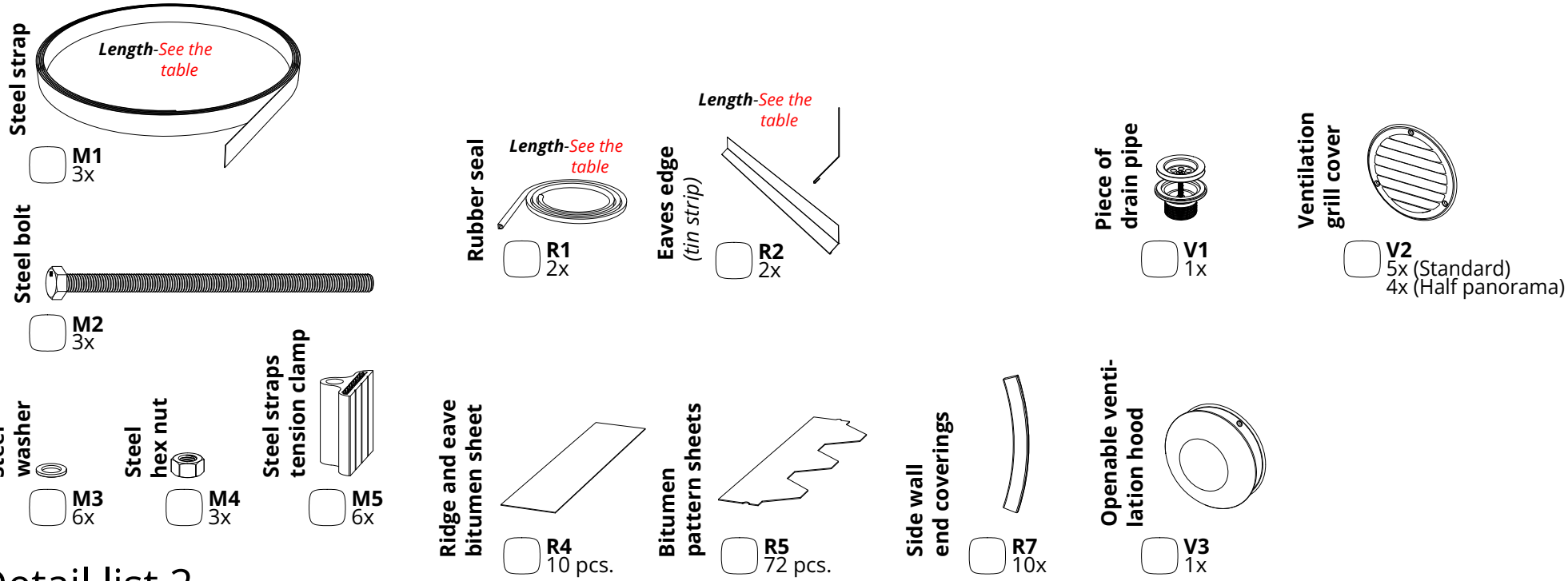

Lerra SAUNA SERIES

Detail list 2

Exterior construction

** Door molding **B7a** will be removed during construction.*

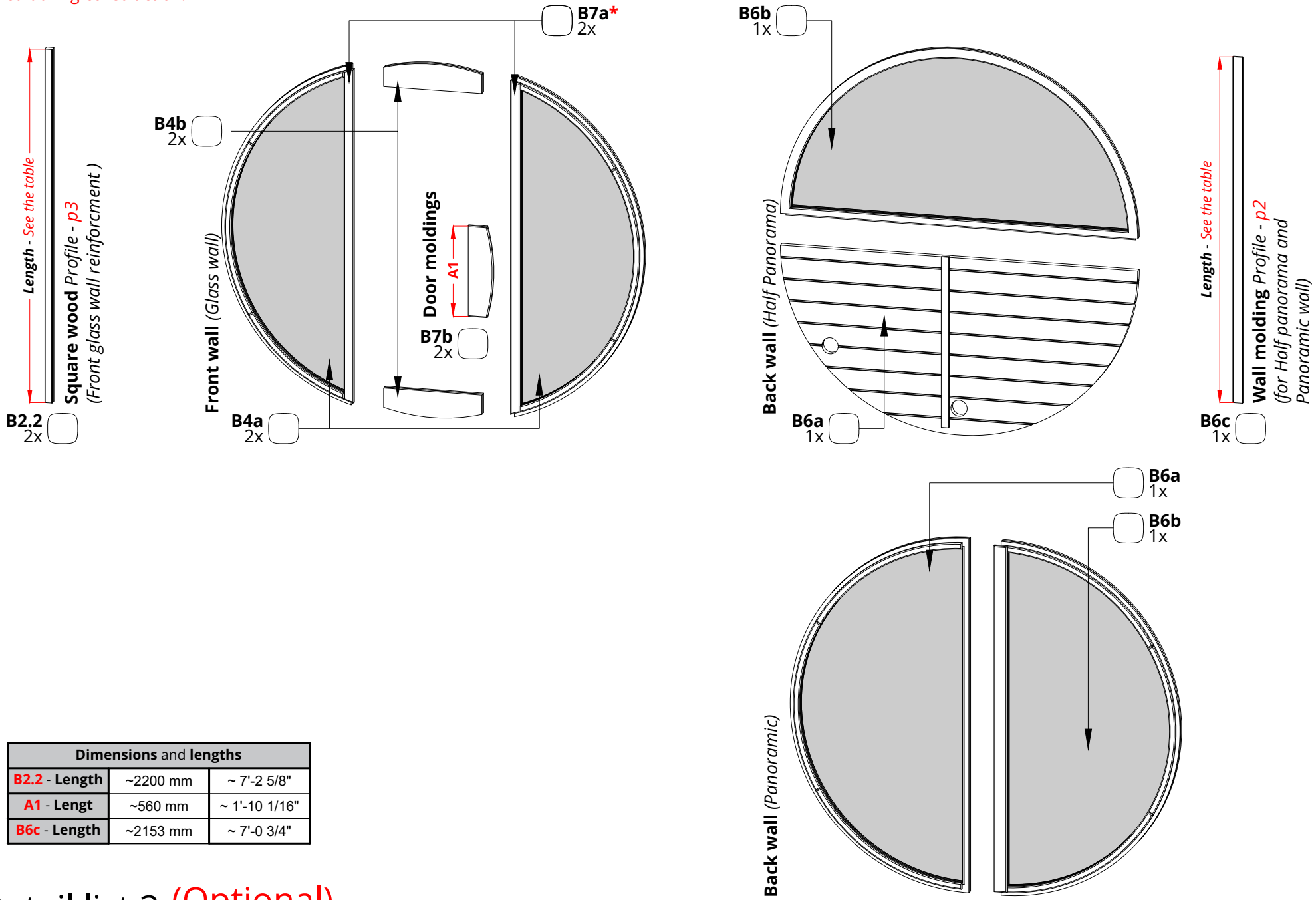

Dimensions and lengths		
B2.2 - Length	~2200 mm	~ 7'-2 5/8"
A1 - Lengt	~560 mm	~ 1'-10 1/16"
B6c - Length	~2153 mm	~ 7'-0 3/4"

Lerra SAUNA SERIES

Detail list 3 (Optional)

Exterior construction

SAUNASELL

Fasteners for the main construction of the sauna:

Name in manual	Nails and screws / Screw size	Quantity
S7	4,5x80mm [~3/16x~3 1/8] for **Spruce**	50
	4,2x75mm [~3/16x~2 15/16] for **Thermo**	
S6.1	4,2x75mm [~3/16x~2 15/16]	25
S5	4,5x60mm [~3/16x~2 3/8] for **Spruce**	135
	4,2x55mm [~3/16x~2 3/16] for **Thermo**	
S2	3x40mm [~1/8x~1 9/16]	15
S1	3x30mm [~3/16x~1 15/16]	35
R6	**Nail** 2,5x20mm [~1/8x~13/16]	1kg

Fasteners for sauna door(s):

Name in manual	Nails and screws / Screw size	Quantity
S6.2	4,2x75mm [~3/16x~2 15/16]	20
S3.2	*(For Front Glass wall)* 4,5x50mm [~3/16x~1 15/16]	20
S2	*(For Front Wooden wall)* 3x40mm [~1/8x~1 9/16]	20
P	Hole plug	15

(OPTIONAL) Fasteners for Front glass wall:

Name in manual	Nails and screws / Screw size	Quantity
S5	4,5x60mm [~3/16x~2 3/8] for **Spruce**	12
	4,2x55mm [~3/16x~2 3/16] for **Thermo**	

(OPTIONAL) Fasteners for Half Panoramic back wall:

Name in manual	Nails and screws / Screw size	Quantity
S7	4,5x80mm [~3/16x~3 1/8] for **Spruce**	5
	4,2x75mm [~3/16x~2 15/16] for **Thermo**	
S5	4,5x60mm [~3/16x~2 3/8] for **Spruce**	5
	4,2x55mm [~3/16x~2 3/16] for **Thermo**	
S2	3x40mm [~1/8x~1 9/16]	5

(OPTIONAL) Fasteners for Panoramic back wall

Name in manual	Nails and screws / Screw size	Quantity
S3.2	4,5x50mm [~3/16x~1 15/16]	5
S2	3x40mm [~1/8x~1 9/16]	10

Lerra SAUNA SERIES

Detail list 4

Exterior construction

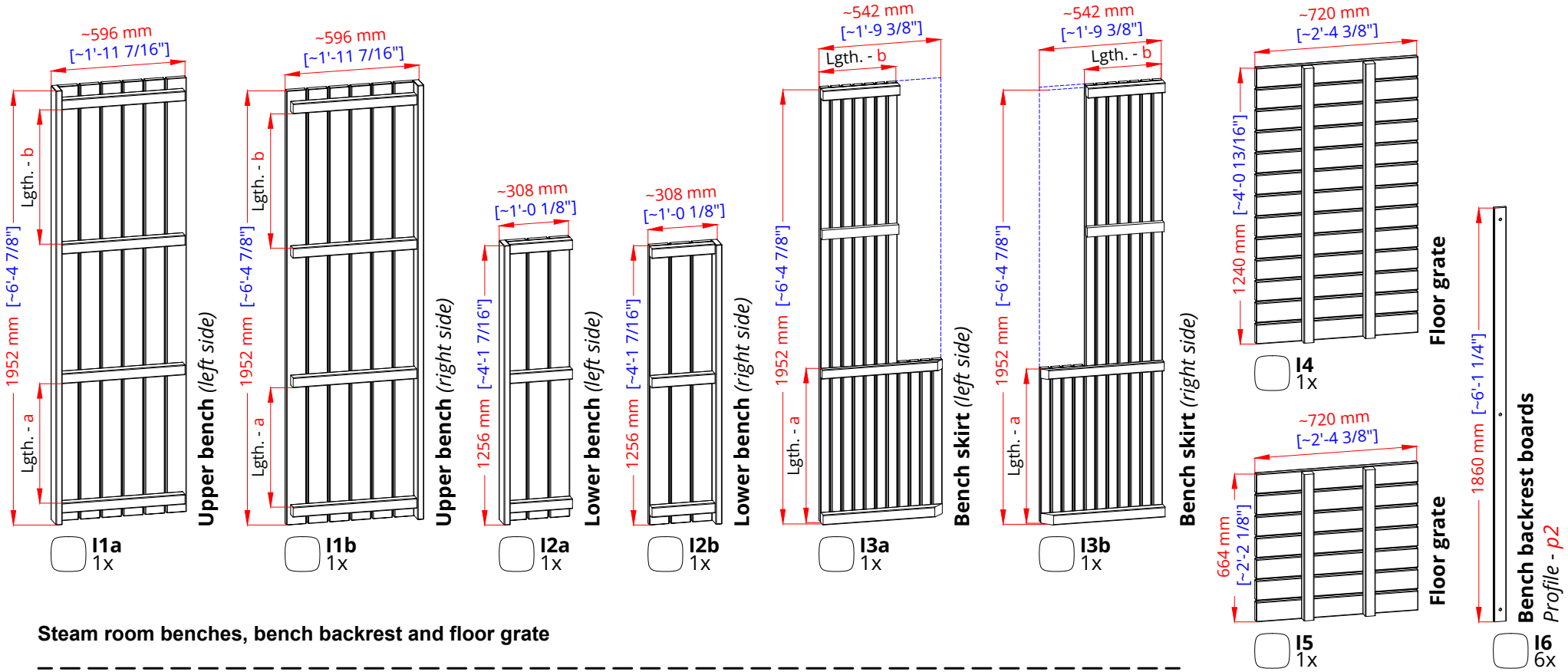

Steam room benches, bench backrest and floor grate

Terrace benches and floor grates

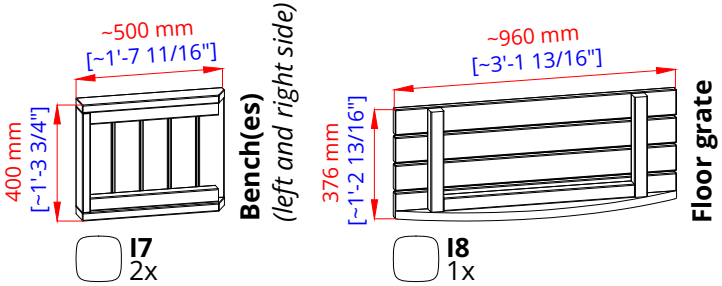

	Dimensions and lengths			
	Lgth. - a		Lgth. - b	
I1a and I1b	~537 mm	~ 1'-9 1/8"	~604 mm	~ 1'-11 3/4"
I3a and I3b	693 mm	~ 2'-3 5/16"	~342 mm	~ 1'-1 7/16"

Lerra SAUNA SERIES

Detail list 5

Bench assembly

SAUNASELL

Square wood and boards for the Bench assembly:

Name in manual	K Square woods 45x45mm	Qty. *A	Qty. *B	Qty. *C	
K60	***Length** - See the table*	2	4	4	☐
K55	***Length** - See the table*	4	2	2	☐
K46	***Length** - See the table*	2	-	2	☐
K45	***Length** - See the table*	-	2	2	☐
K34	***Length** - See the table*	2	2	-	☐
K28	***Length** - See the table*	4	4	4	☐
K25	***Length** - See the table*	4	4	6	☐
K20	***Length** - See the table*	4	4	6	☐
K10	***Length** - See the table*	4	4	4	☐
L1	***Length** - See the table*	4	4	4	☐

***A** - Wooden wall(s) and Front wooden walll with and without Half Panoramic wall.
***B** - Front wooden wall and Panoramic wall.
***C** - Front Glass wall with and without Half Panoramic wall.

Fasteners for the main construction of the sauna:

Name in manual	Nails and screws / Screw size	Quantity	
S7	4,5x80mm [~3/16x~3 1/8] for **Spruce**	70	☐
	4,2x75mm [~3/16x~2 15/16] for **Thermo**		
S5	4,5x60mm [~3/16x~2 3/8] for **Spruce**	70	☐
	4,2x55mm [~3/16x~2 3/16] for **Thermo**		
S2	3x40mm [~1/8x~1 9/16]	20	☐
P	Hole plug	20	☐

Dimensions and **lengths**		
K60 - Length	600 mm	~ 1'-11 5/8"
K55 - Length	550 mm	~ 1'-9 5/8"
K46 - Length	460 mm	~ 1'-6 1/8"
K45 - Length	450 mm	~ 1'-5 11/16"
K34 - Length	340 mm	~ 1'-1 3/8"
K28 - Length	280 mm	~ 0'-11"
K25 - Length	250 mm	~ 0'-9 7/8"
K20 - Length	200 mm	~ 0'-7 7/8"
K10 - Length	100 mm	~ 0'-3 15/16"
L1 - Length	450 mm	~ 1'-5 11/16"

Profile - p3 for **K..**
Profile - p6 for **L..**

Lerra SAUNA SERIES

Detail list 6

Bench assembly

Tools needed for sauna construction:

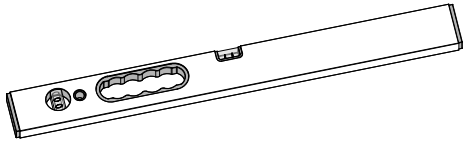

- Spirit level /
  Laser level (best option)

- Tape measure /
  folding rule

- Marking tool - pencil
  (do not use a marker pen)

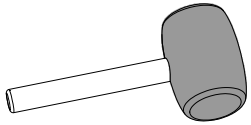

- Rubber hammer

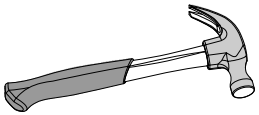

- Hammer

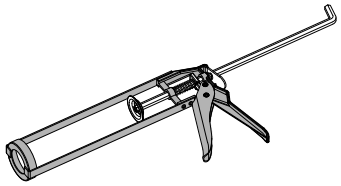

- Sealant gun

- Utility knife

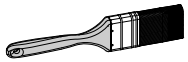

- Paintbrush

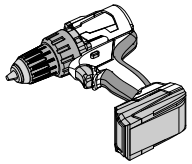

- Cordless drill(s)

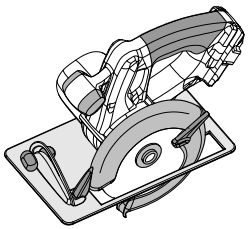

- Circular saw

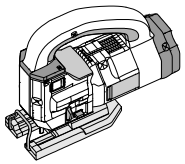

- Jigsaw / hand saw

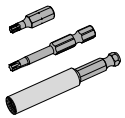

- Screwdriver bits

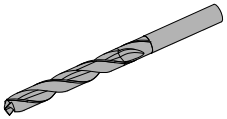

- drill bits
  (different sizes)

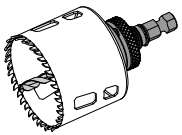

- hole saw (different sizes)
  for cutting a hole for the drain pipe (only necessary if there is no hole in the s center board)!

Additional materials required, if not ordered or included:

- Wood glue /
  assembly adhesive

- Varnish
  (to protect wood from moisture and mold)

- Paint or wood oil
  for wood protection (external surfaces of sauna)

- Bitumen sealant

Lerra SAUNA SERIES

Tools and materials

Screw(s)*	Name:	Quantity:
	S7	4

*Screw dimensions - exterior construction detail list

NB! use a level

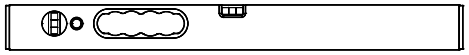

The base of the sauna must be level!

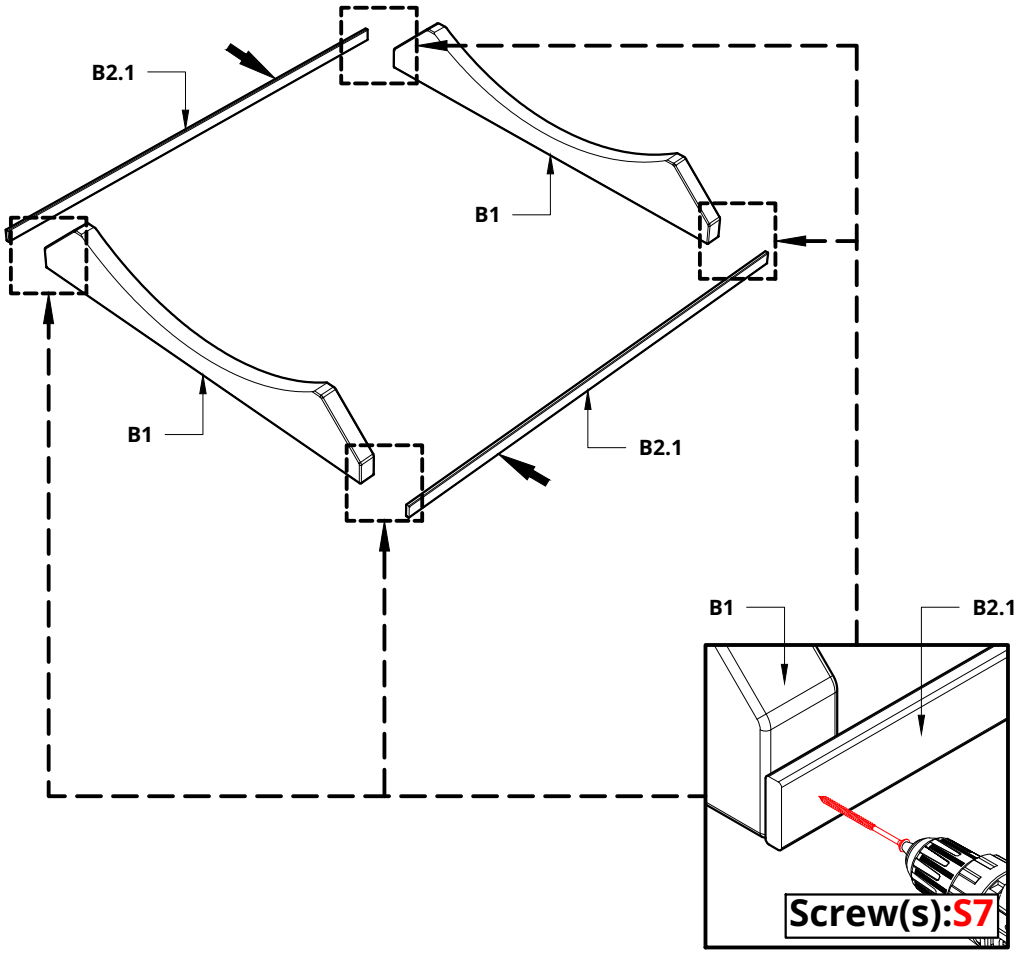

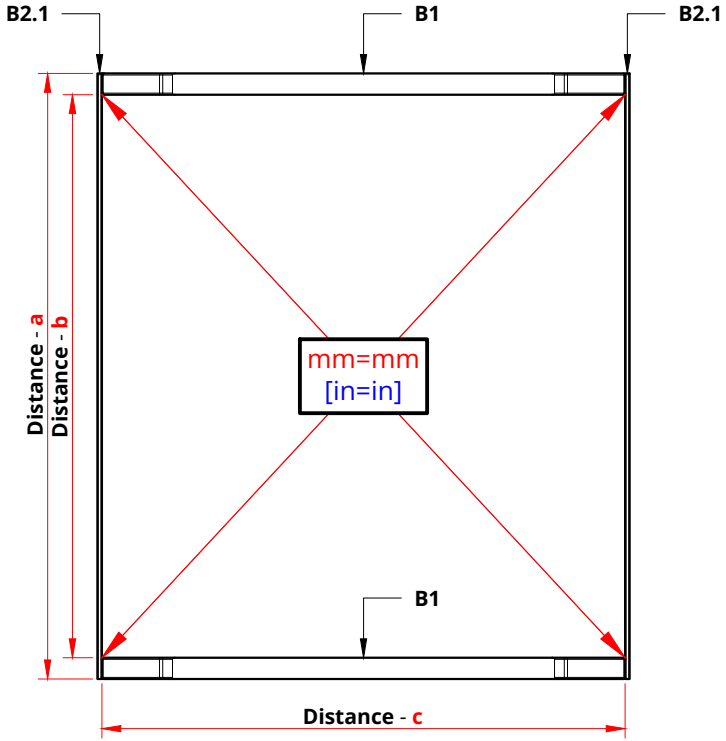

Dimensions and measurements		
Distance - a	2002 mm	~ 6'-6 13/16"
Distance - b	~1862 mm	~ 6'-1 5/16"
Distance - c	1730 mm	~ 5'-8 1/8"

Lerra SAUNA SERIES

Screw(s)*	Name:	Quantity:
	S7	4

*Screw dimensions - exterior construction detail list

Please countersink the screw head(s)!

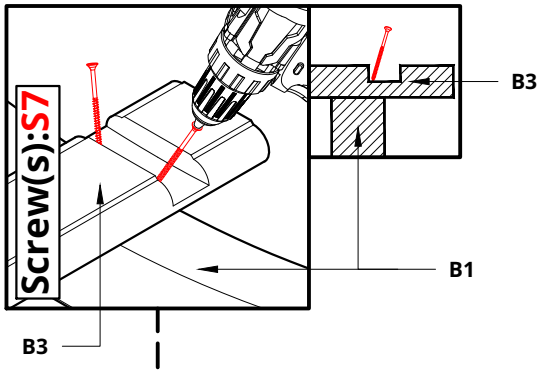

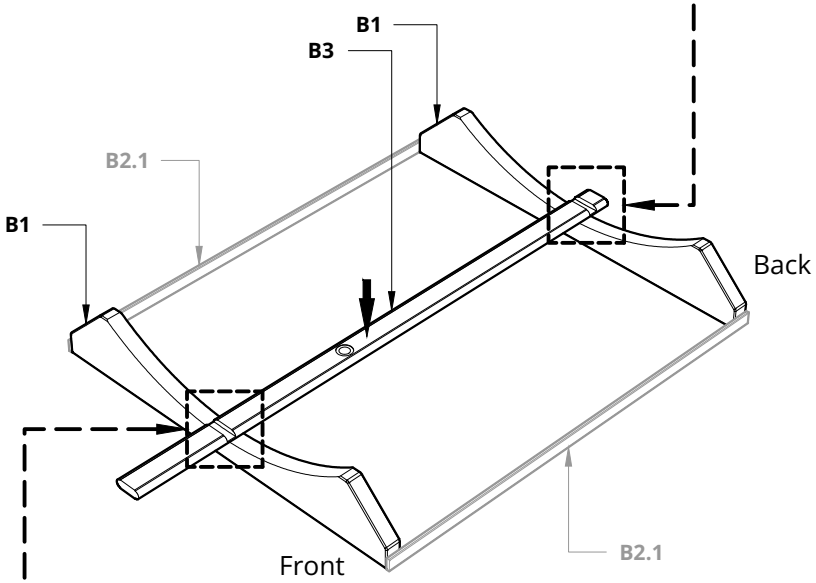

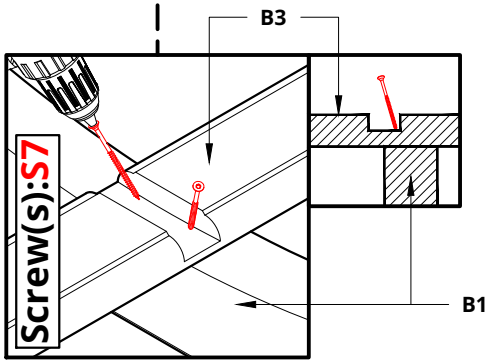

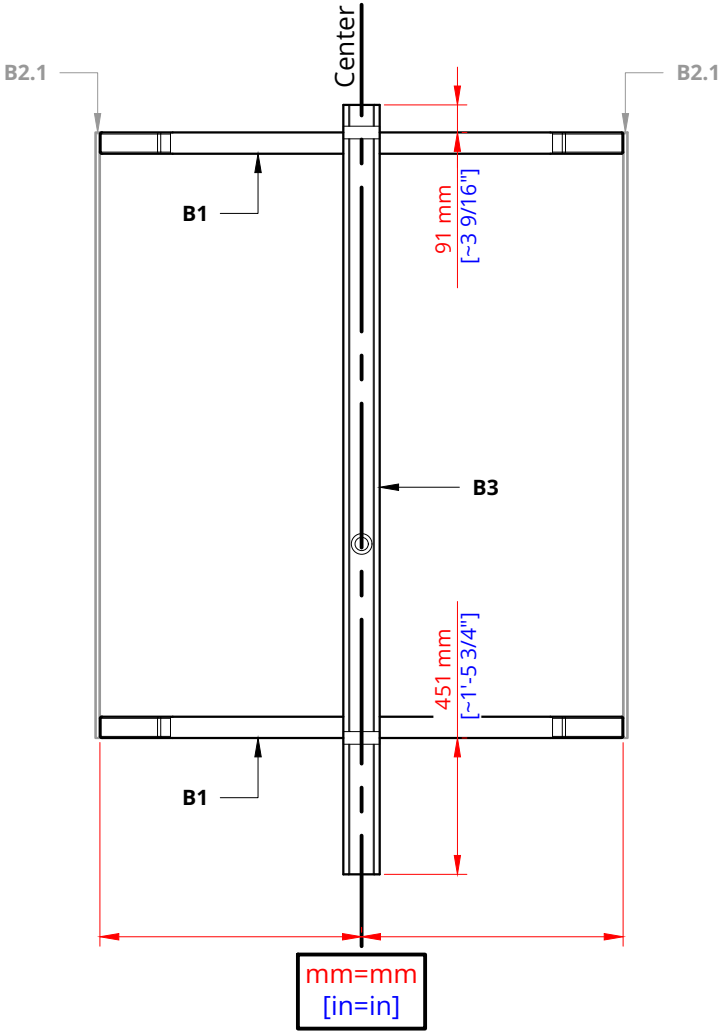

Lerra SAUNA SERIES

Screw(s)*	Name:	Quantity:
	S7	24

*Screw dimensions - exterior construction detail list

Please countersink the screw head(s)!
Use a rubber mallet to tap the board(s) together and fasten them with screws!
Drill 10 - 12 mm hole in each board groove!

Cut a hole for the drain pipe *(only necessary if there is no hole)*!

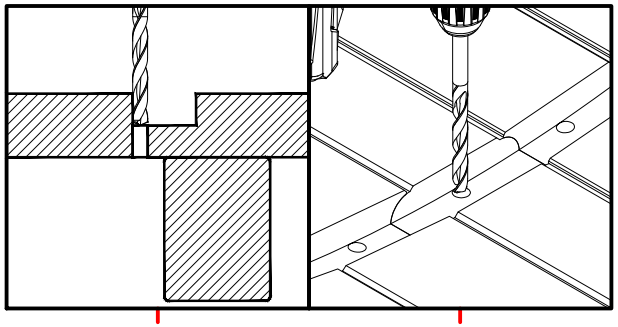

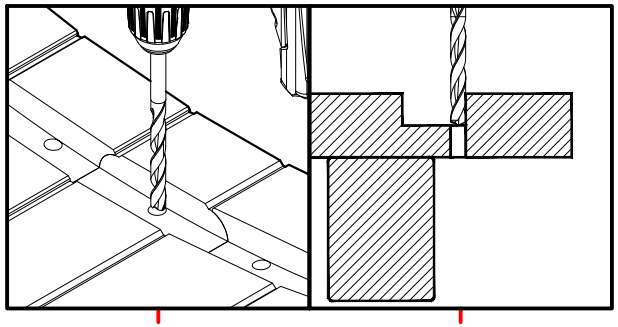

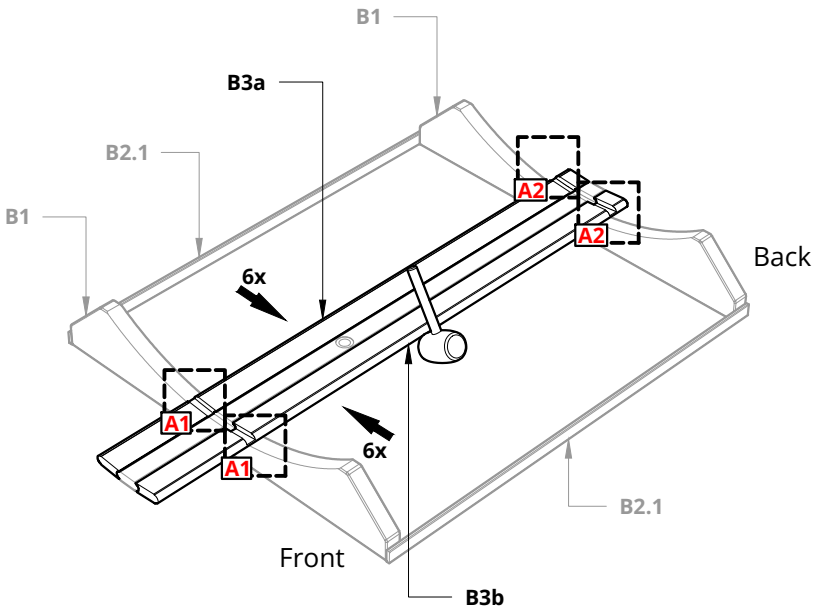

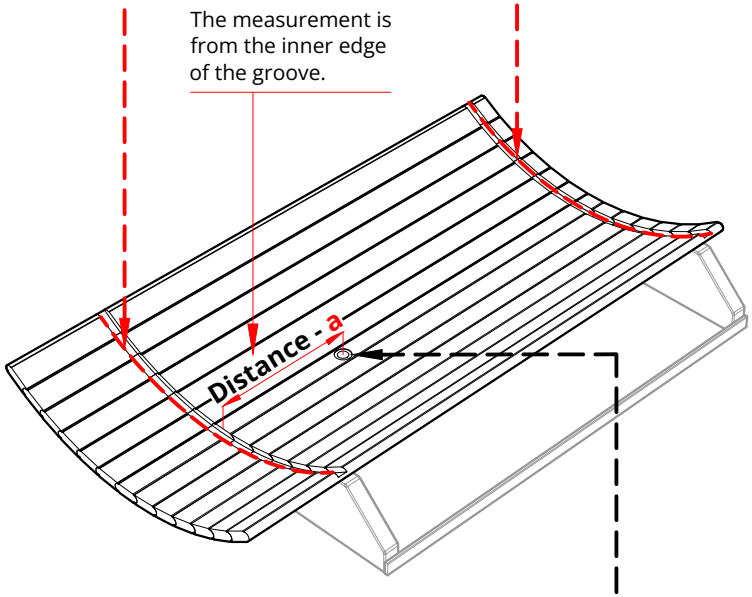

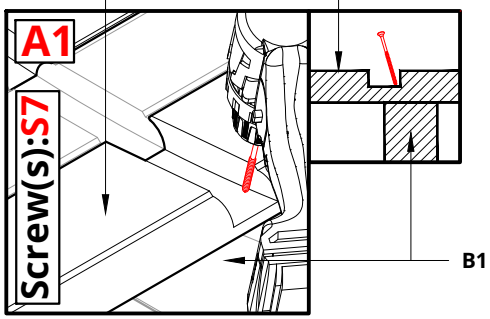

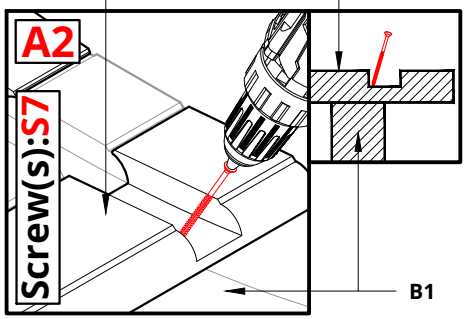

Dimensions and measurements		
Distance - a	620 mm	~ 2'-0 7/16"
B	~10 mm	~ 0'-0 3/8"
C	68 mm	~ 0'-2 11/16"
D	44 mm	~ 0'-1 3/4"

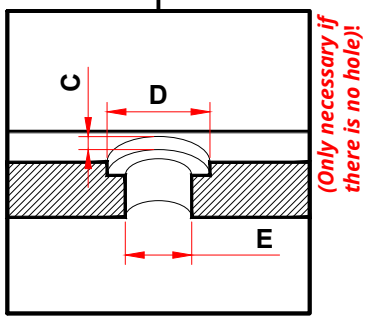

Lerra SAUNA SERIES

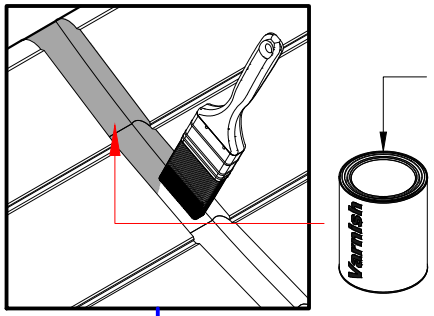

Add 2 coats of varnish (C1)*

Clean the groove and floor surfaces from wood waste and other dirt!
Cover the grooves and the floor surfaces (middle) with varnish!*
Use paint or wood oil at the front end and back end of the board(s)!*
** Follow the manufacturer's instructions!*

Add 2 coats of varnish (C1)*

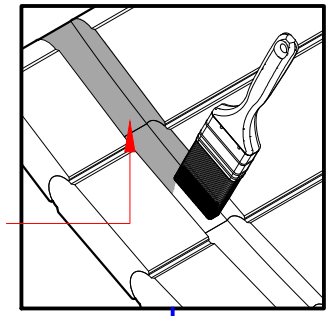

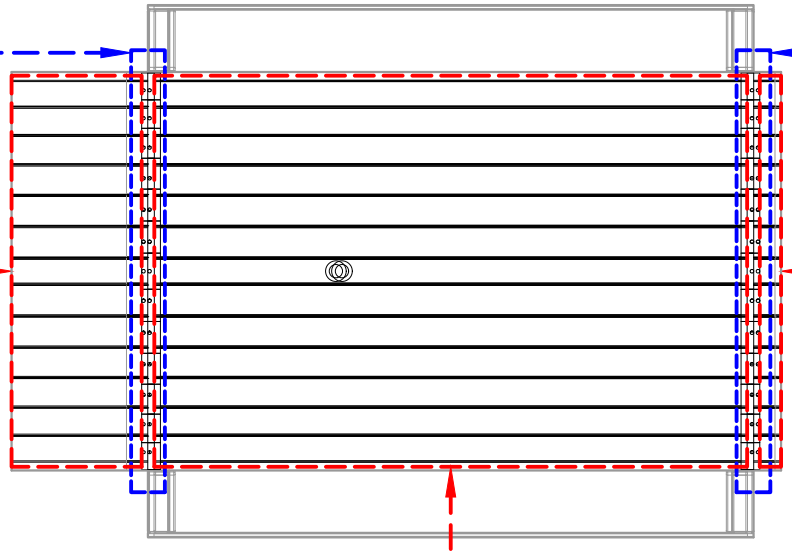

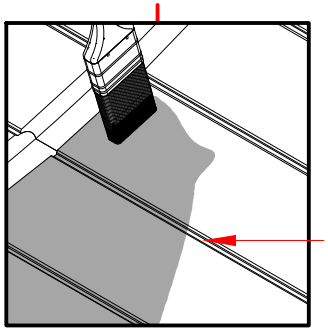

Add 1-2 coats of paint (C3) or wood oil*

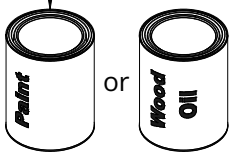

Add a layer of varnish (C2) or wood oil*

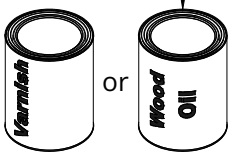

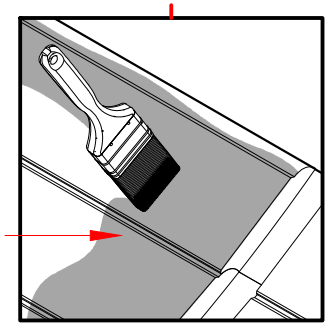

Add 1-2 coats of paint (C3) or wood oil*

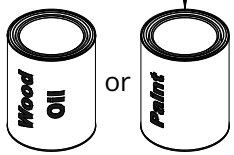

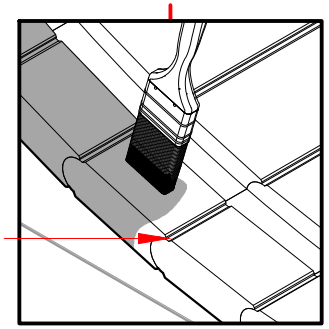

Lerra SAUNA SERIES

	Name:	Quantity:
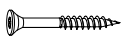	S7	2

*Screw dimensions - exterior construction detail list

Lift the bottom of the sauna up on one side and install some aids!
Clean the bottom surface!
Cover the surface with paint!*
Install a piece of drain pipe V1!
Install the rubber seal R1!
Remove boards B2.1!
*** Follow the manufacturer's instructions!*

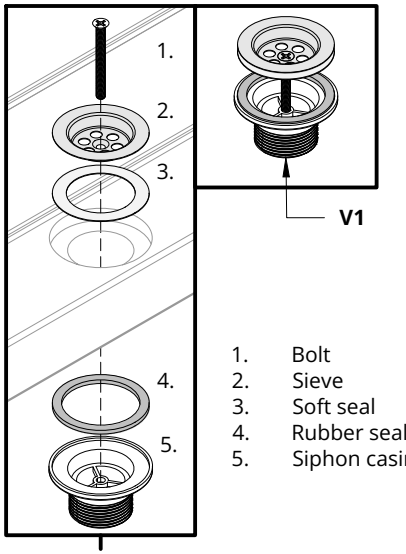

1. Bolt
2. Sieve
3. Soft seal
4. Rubber seal
5. Siphon casing

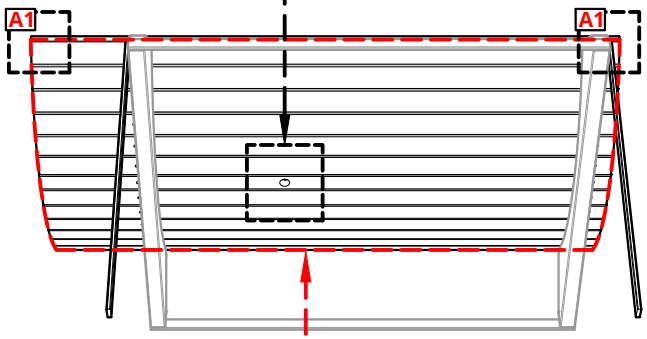

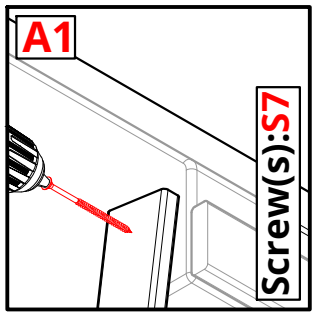

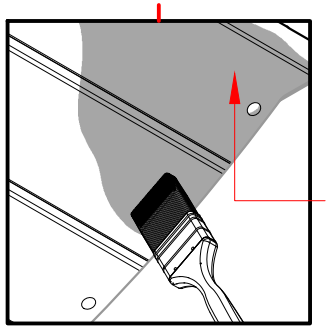

Add 1-2 coats of paint (C3) or wood oil**

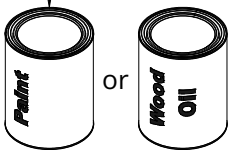

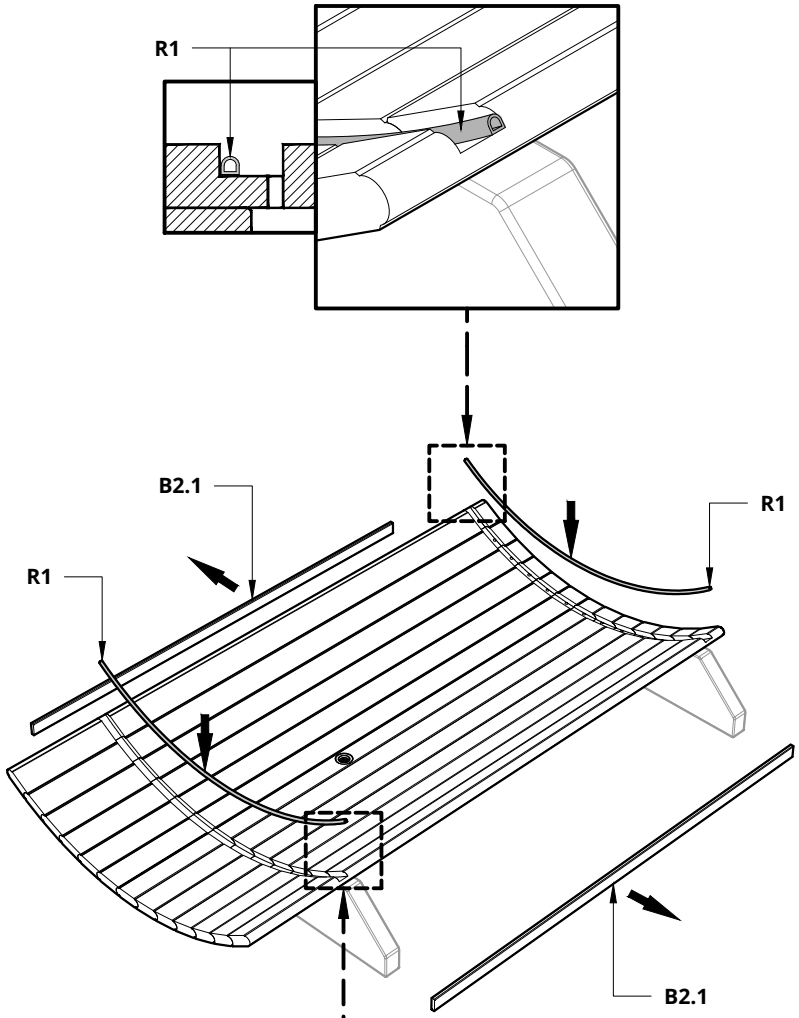

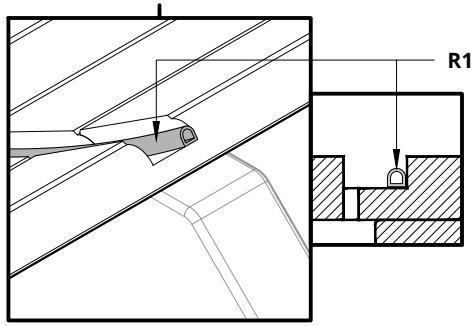

Lerra SAUNA SERIES

Screw(s)*	Name:	Quantity:
	S7	4
	S5	4

*Screw dimensions - exterior construction detail list

Please countersink the screw head(s)!
Assemble and prepare of the front wall!
Fasten the parts with screws and jigs!
Clean the edge and the outer surface of the front wall from wood waste and other dirt!
Varnish the edge of the wall from the bottom to middle!**
Cover the wall outer surface with paint!**
*** Follow the manufacturer's instructions!***

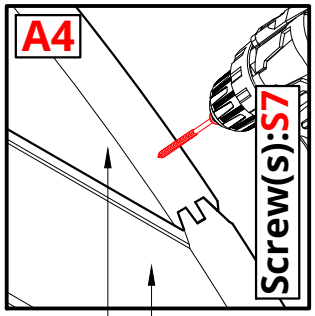

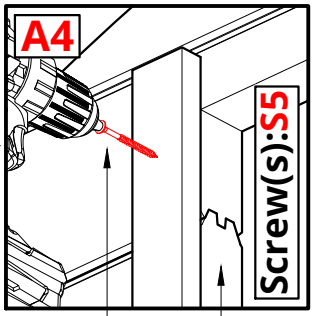

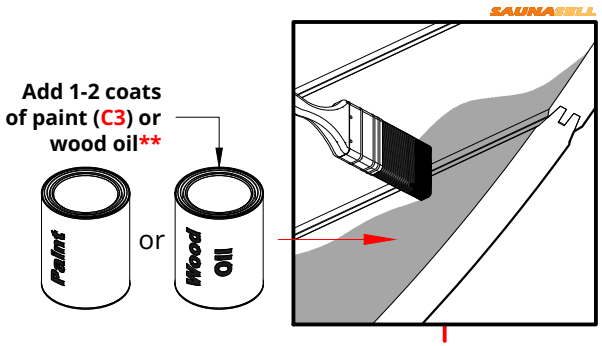

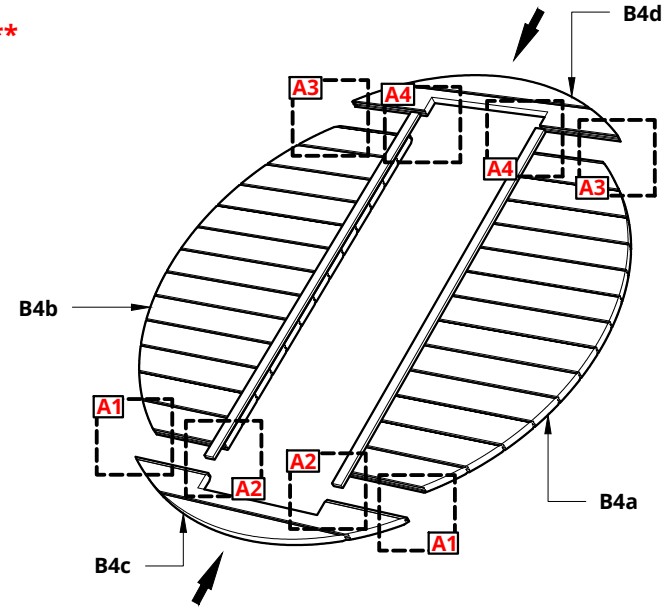

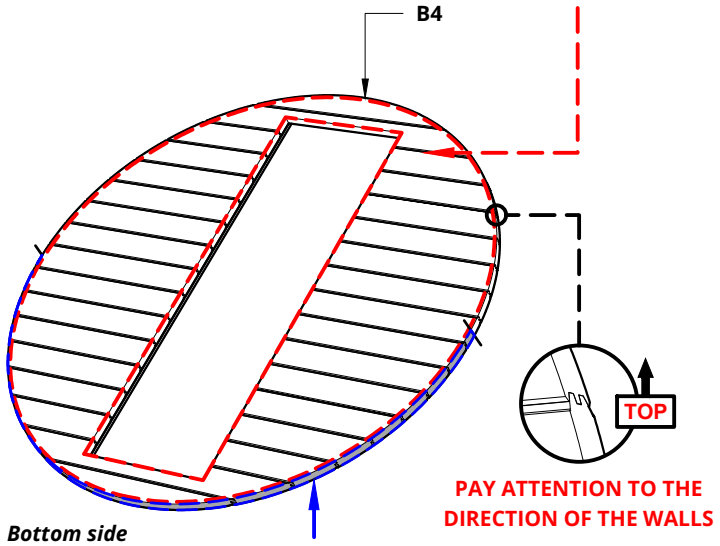

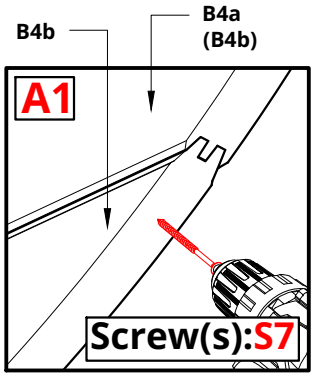

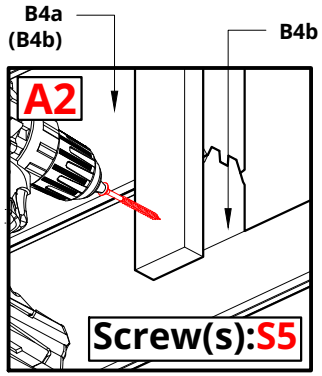

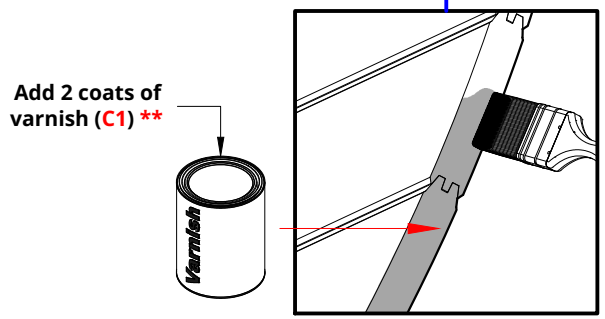

Lerra SAUNA SERIES

Screw(s)*	Name:	Quantity:
	S5	12

*Screw dimensions - exterior construction detail list

Only necessary for a glass wall version!
Please countersink the screw head(s)!
Assemble and prepare of the front wall!
Remove the door moldings (B7a)!
Use glue between the B4a and B4b!
Fasten the parts with screws and jigs!
Let the glue dry!
Clean the edge of the wall from wood waste and other dirt!
Varnish the edge of the wall from the bottom to middle!**
*** Follow the manufacturer's instructions!*

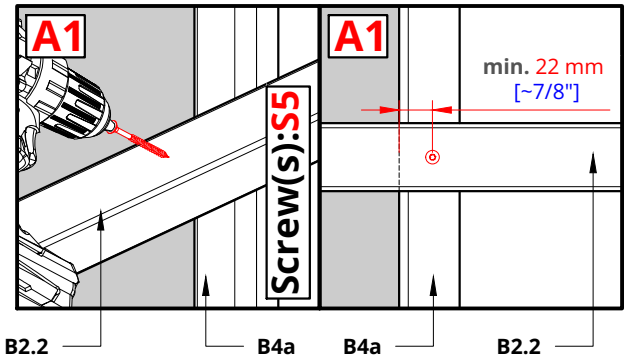

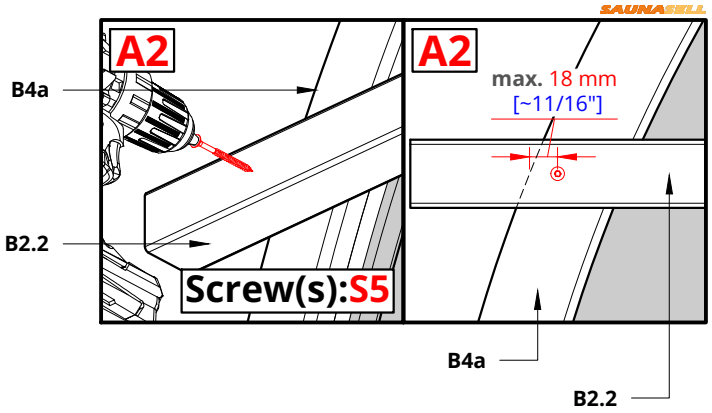

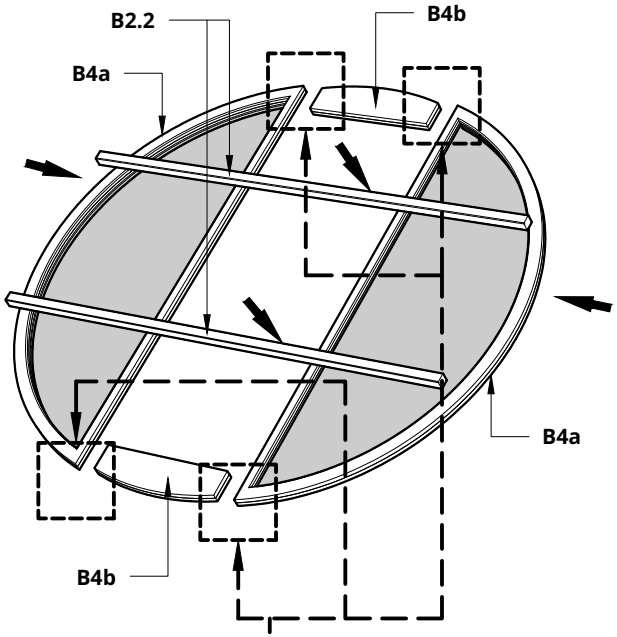

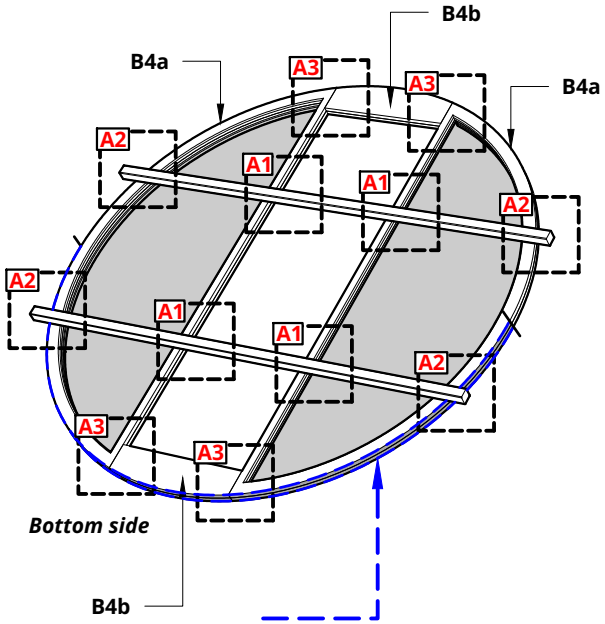

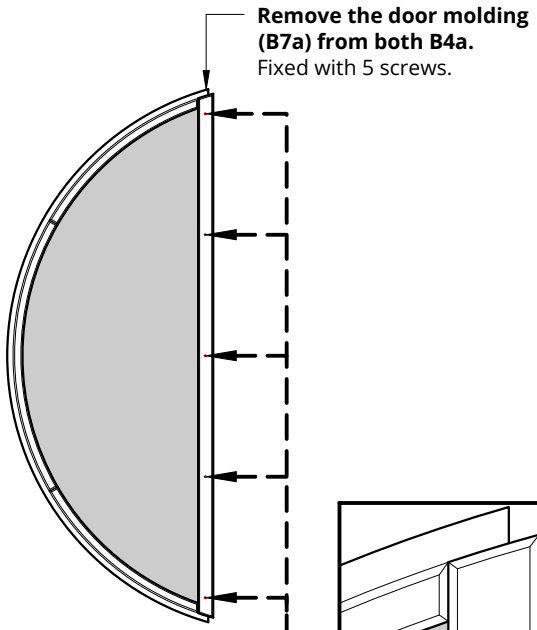

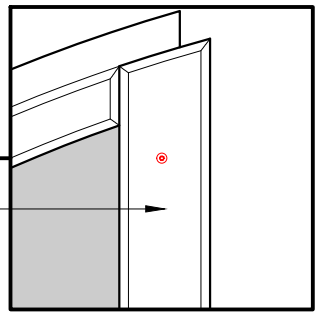

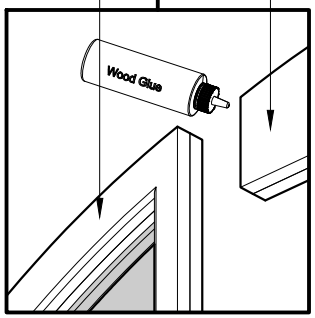

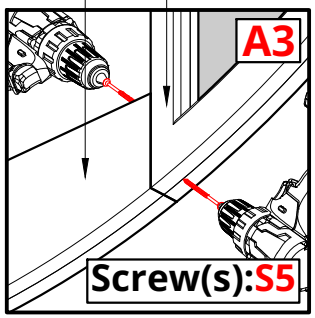

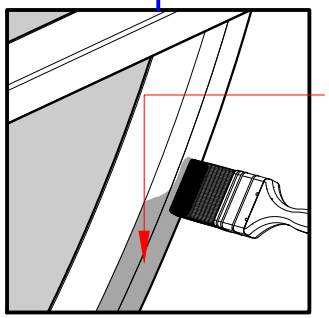

Preparation of the back wall(s)!
Clean the edge of the lower part of the back wall and the outer surface from wood waste and other dirt!
Varnish the lower edge of the back wall from the bottom to middle!*
Cover the lower part (and upper part) of the back wall outer surface with paint!***
** Follow the manufacturer's instructions!*
*** Only on the wooden back wall*

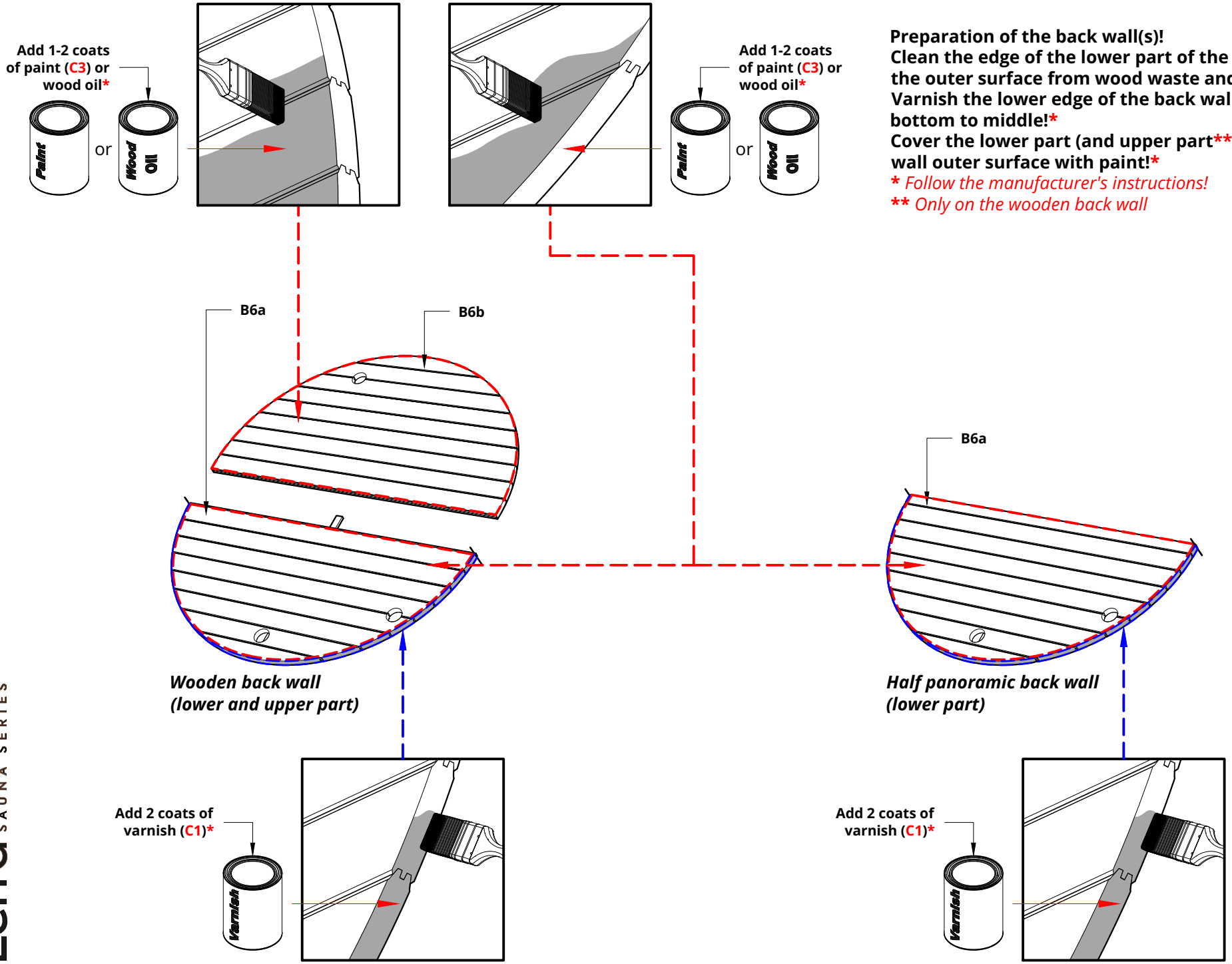

Screw(s)*	Name:	Quantity:
	S3.2	5
	S2	10

*Screw dimensions - exterior construction detail list

Only necessary for a panoramic back wall version!
Please countersink the screw head(s)!
Assemble and prepare of the panoramic back wall!
Use glue between the B6a and B6b!
Fasten the parts with screws and Let the glue dry!
Install the wall molding B6c with 10 screws
Clean the edge of the wall from wood waste and other dirt!
Varnish the edge of the wall from the bottom to middle!**
*** Follow the manufacturer's instructions!*

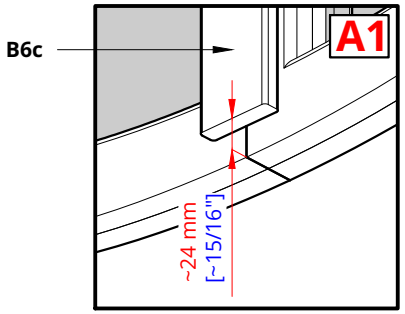

Suggestions!
Drill small hole(s) for the screws in the window(s) moldings before screwing.

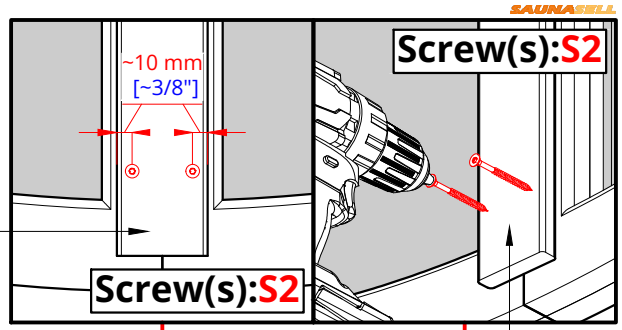

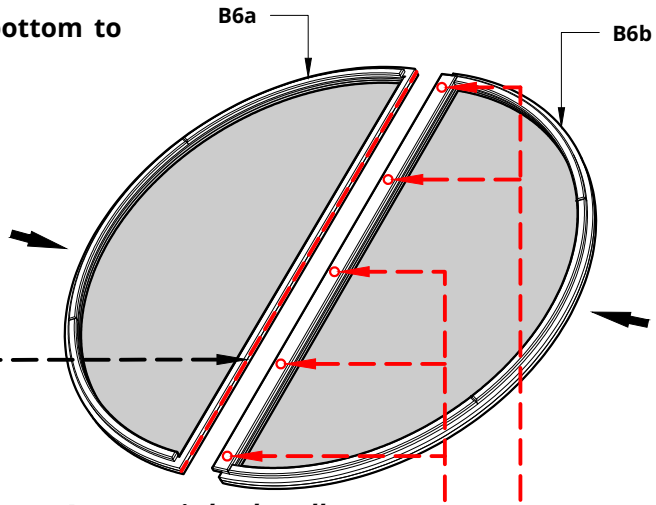

Panoramic back wall
(the outer half)

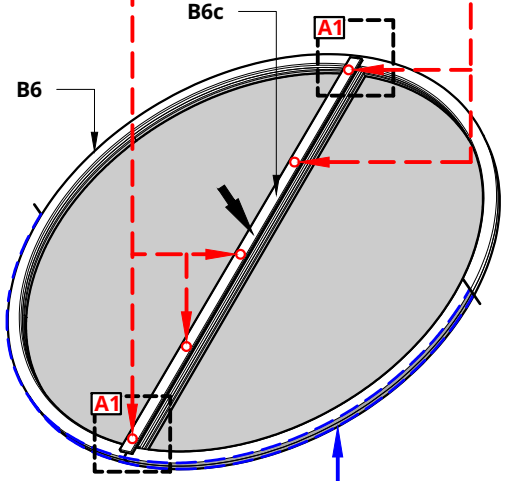

Panoramic back wall
(the inner half)

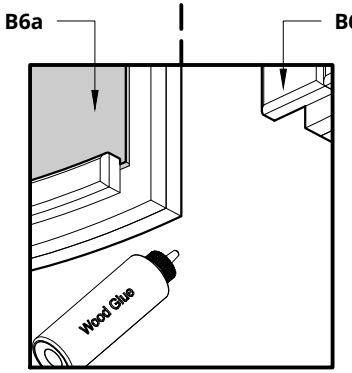

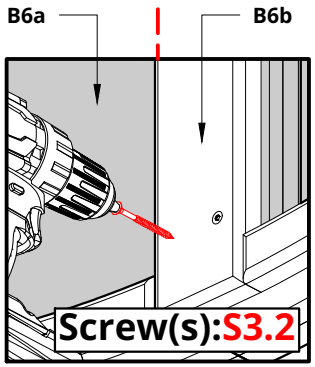

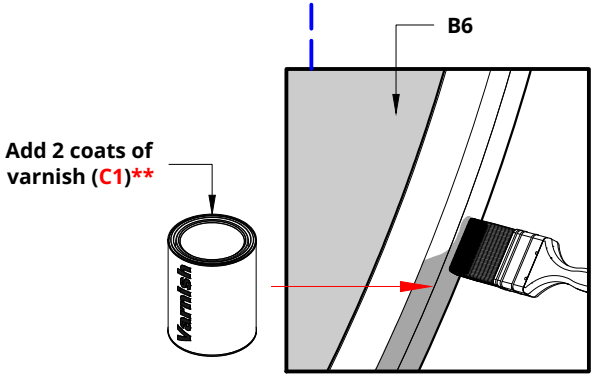

Preparation for side wall boards.

Before doing the processes, clean the sidewall boards from wood waste and other dirt!

** Follow the manufacturer's instructions!*

Boards	First ones		The following ones					
	B3a	B3b	B3a	B3b	B3a	B3b	B3a	B3b
Process 1	✓	✓	✓	✓	✓	✓	✗	✗
Process 2	✓	✓	✓	✓	✓	✓	✓	✓
Process 3	✓	✓	✓	✓	✗	✗	✗	✗
Process 4	✓	✓	✗	✗	✗	✗	✗	✗
Label them	1L	1R	2L	2R	3L	3R	4L	4R
Quantity	5	5	6	6	2	2	14	14

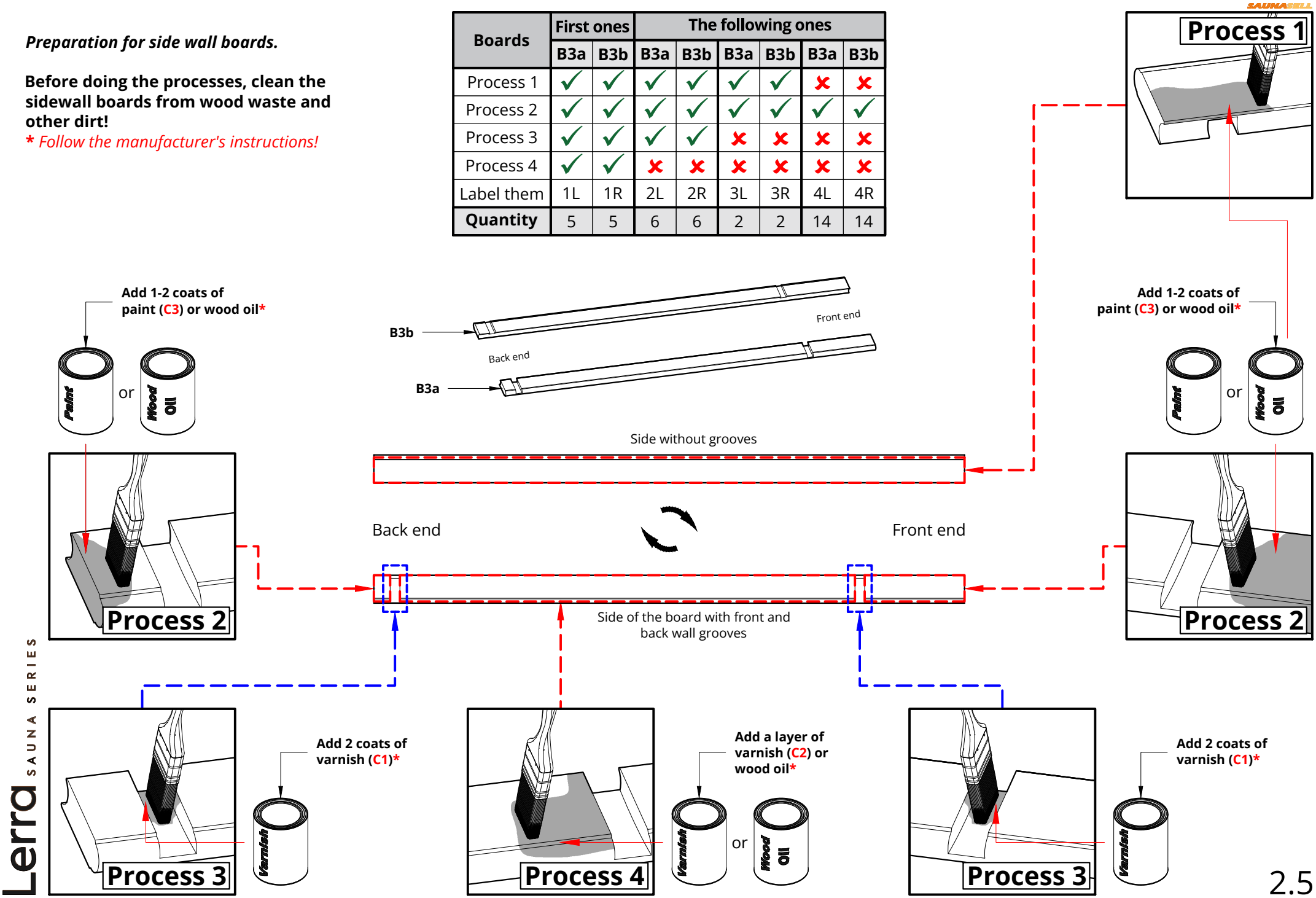

Screw(s)*	Name:	Quantity:
	S5	8

*Screw dimensions - exterior construction detail list

NB! use a level

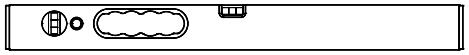

The same steps apply to the bottom part of the panoramic back wall

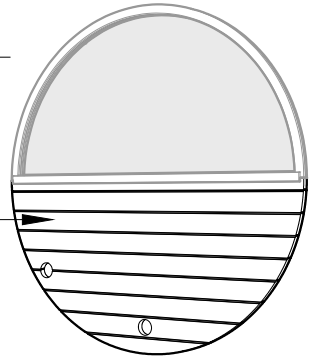

Please countersink the screw head(s)!
Make sure that the walls are centered in relation to the bottom!
Install safety boards on walls, use boards B3a and B3b, that are labeled as 4L and 4R!
Remove the back wall connection strip(s)!
*** Depends on the choice of sauna wall!*

PAY ATTENTION TO THE DIRECTION OF THE WALLS!

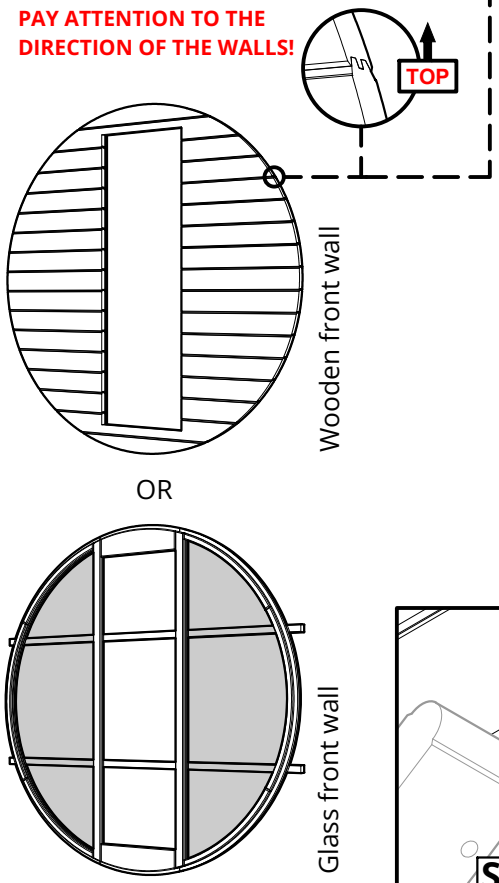

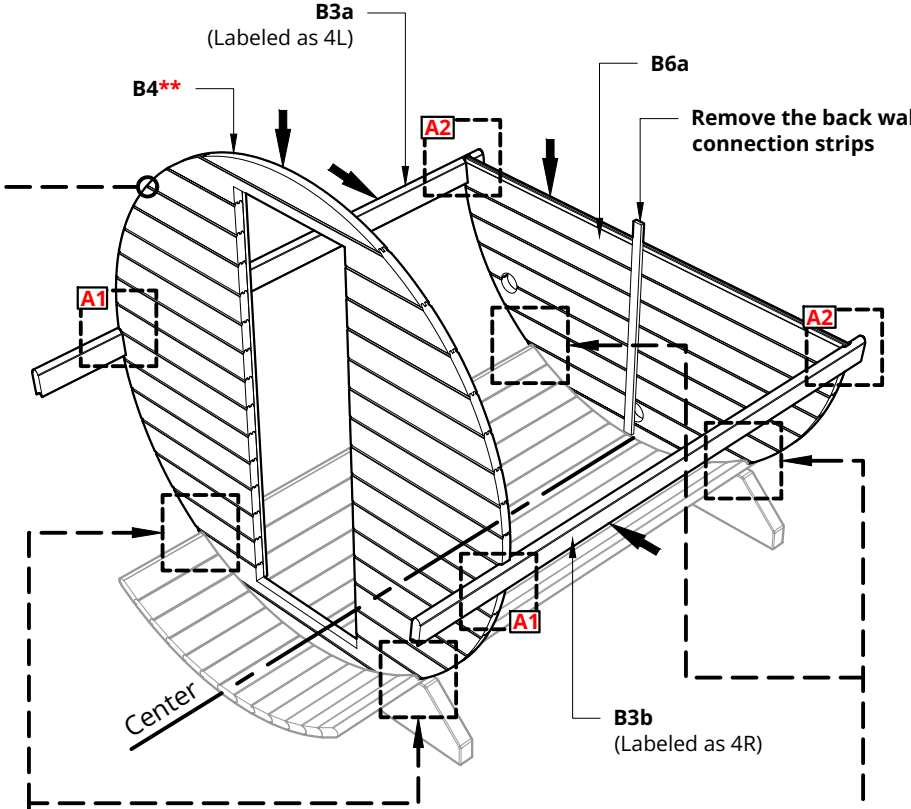

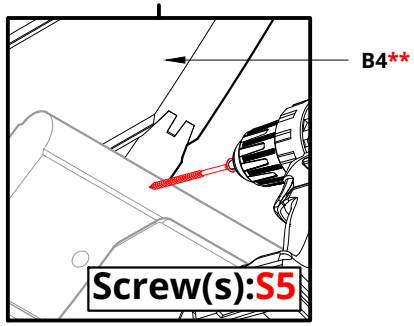

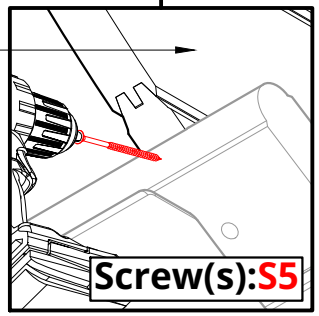

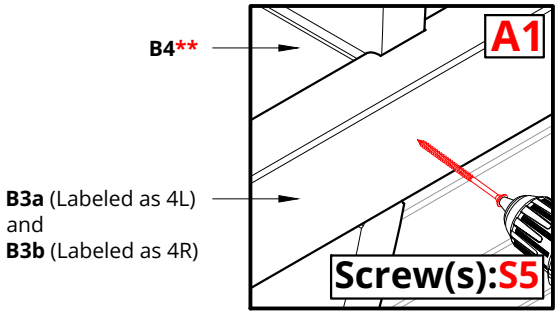

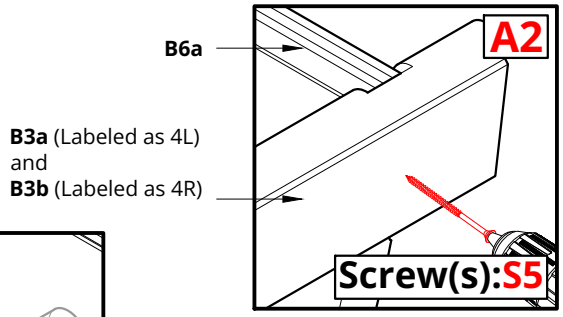

Lerra SAUNA SERIES
B4 depends on the choice of sauna front walls

Screw(s)*	Name:	Quantity:
	S7	2
	S5	4

*Screw dimensions - exterior construction detail list

Please countersink the screw head(s)!
Install the upper part of the back wall B6b and the upper safety board(s)!
Remove the back wall connection strip(s)!
Panorama construction instructions are on the next page!
*** Depends on the choice of sauna wall!*

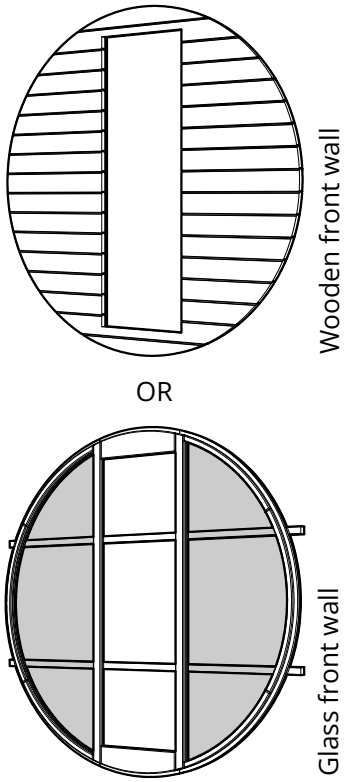

B4 depends on the choice of sauna front walls

Lerra SAUNA SERIES

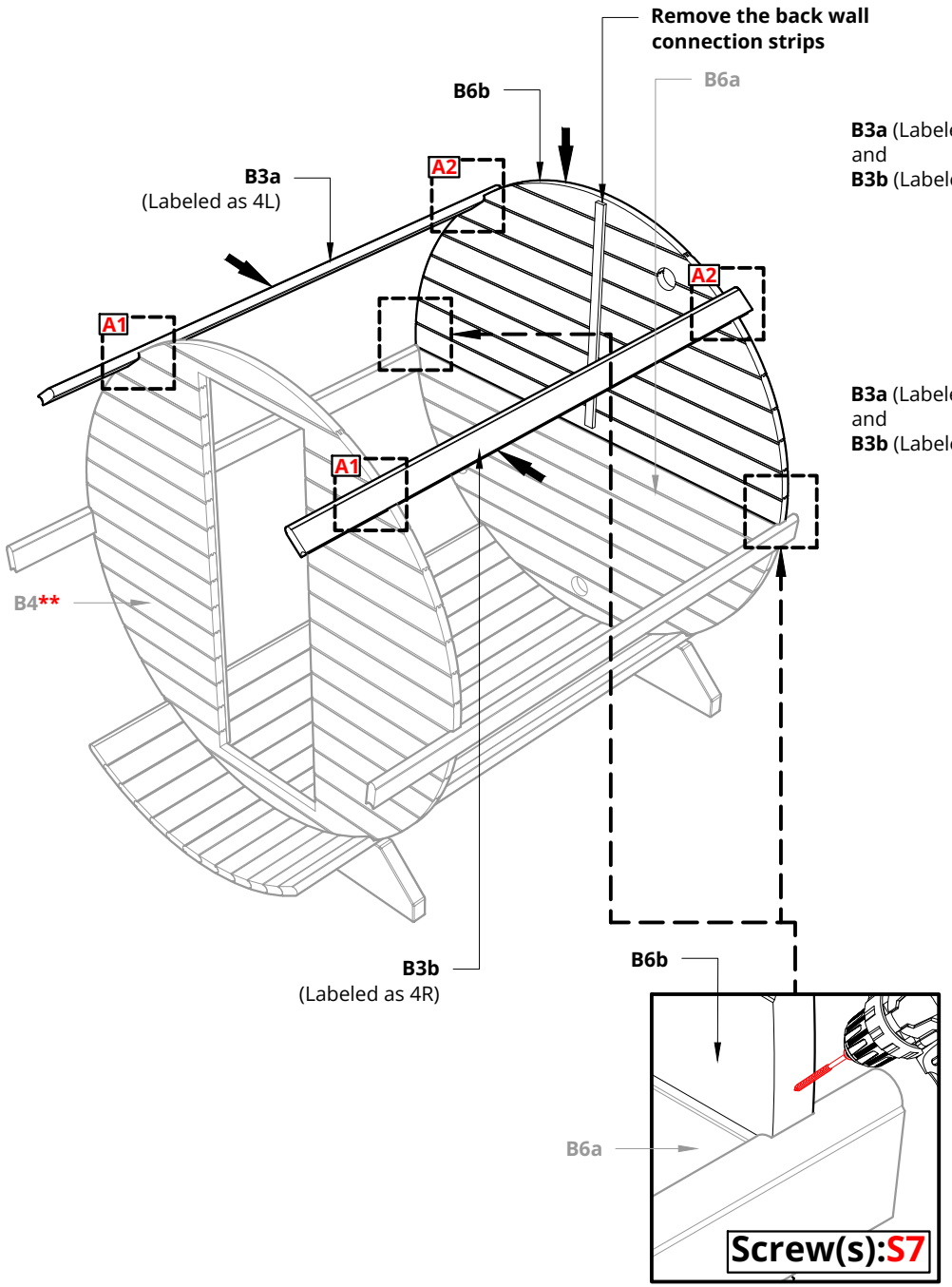

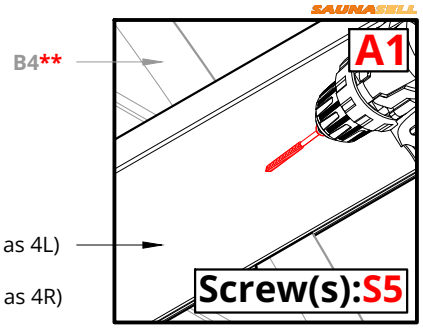

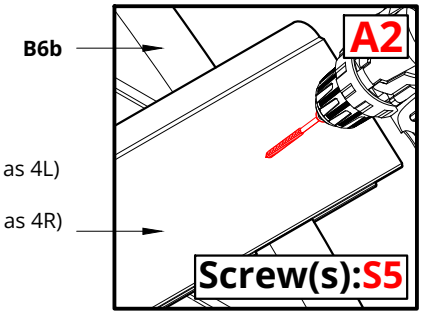

Screw(s)*	Name:	Quantity:
	S7	2
	S5	4
	S2	5

*Screw dimensions - exterior construction detail list

Only necessary for a panorama back wall version!
Install the upper part of the back wall B6b and the upper safety board(s)!
Install a panoramic wall molding!
Full panorama construction instructions are on the next page!
*** Depends on the choice of sauna wall!*

NB! use a level

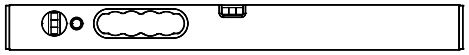

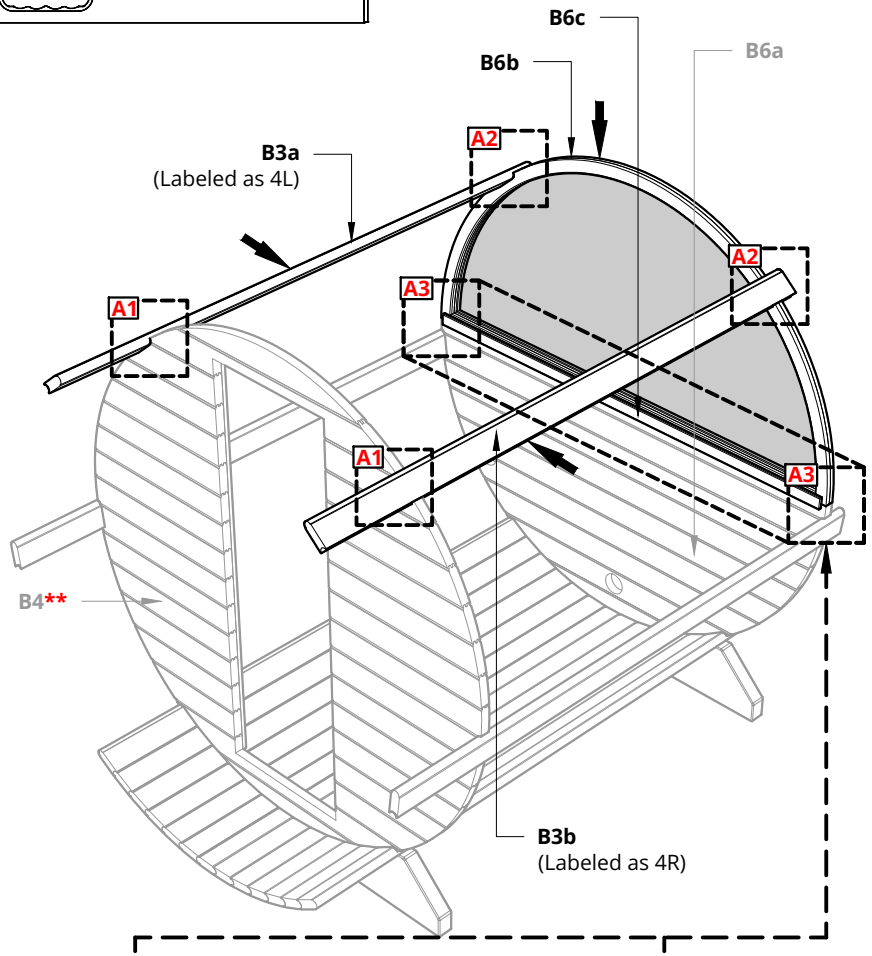

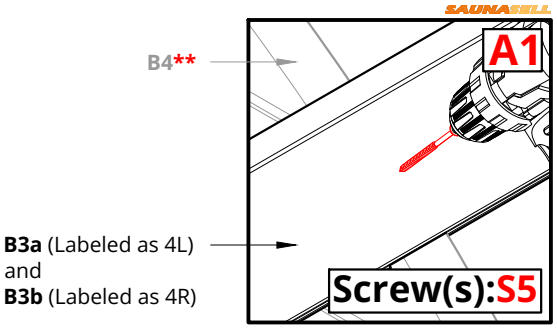

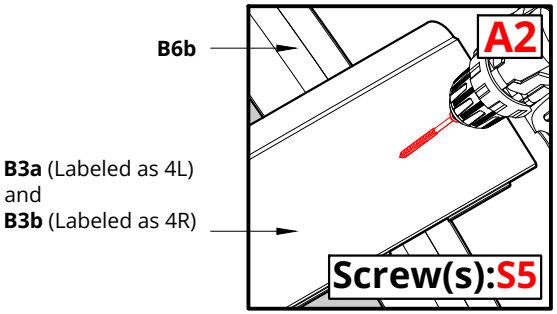

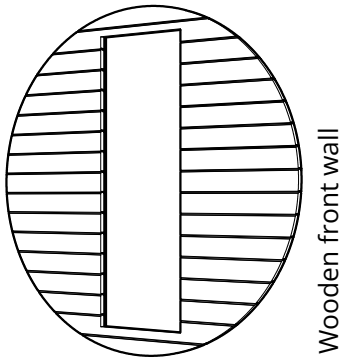

Wooden front wall

OR

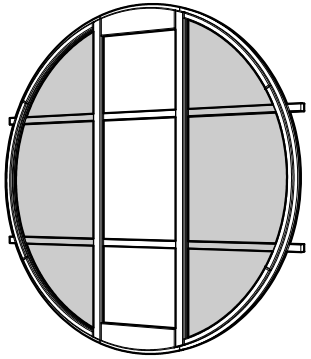

Glass front wall

B4 depends on the choice of sauna front walls

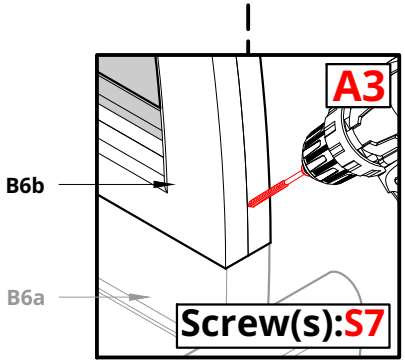

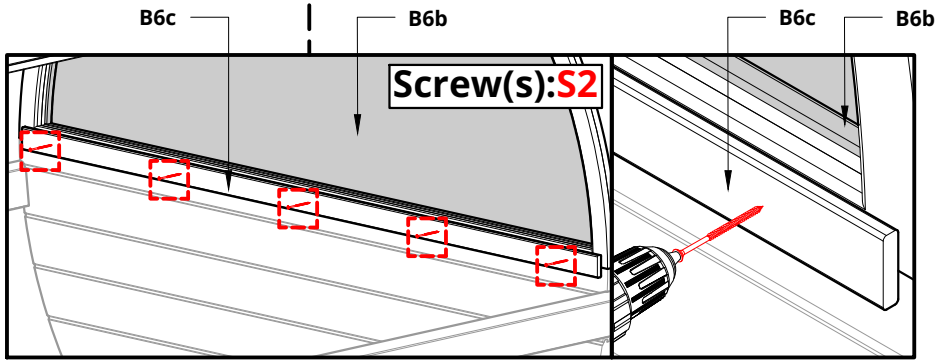

Lerra SAUNA SERIES

Screw(s)*	Name:	Quantity:
	S5	8

*Screw dimensions - exterior construction detail list

NB! use a level

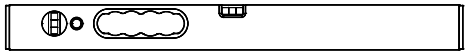

Two people's work!!!
Please countersink the screw head(s)!
Make sure that the walls are centered in relation to the bottom!
Install safety boards on walls, use boards B3a and B3b, that are labeled as 4L and 4R!
*** Depends on the choice of sauna wall!***

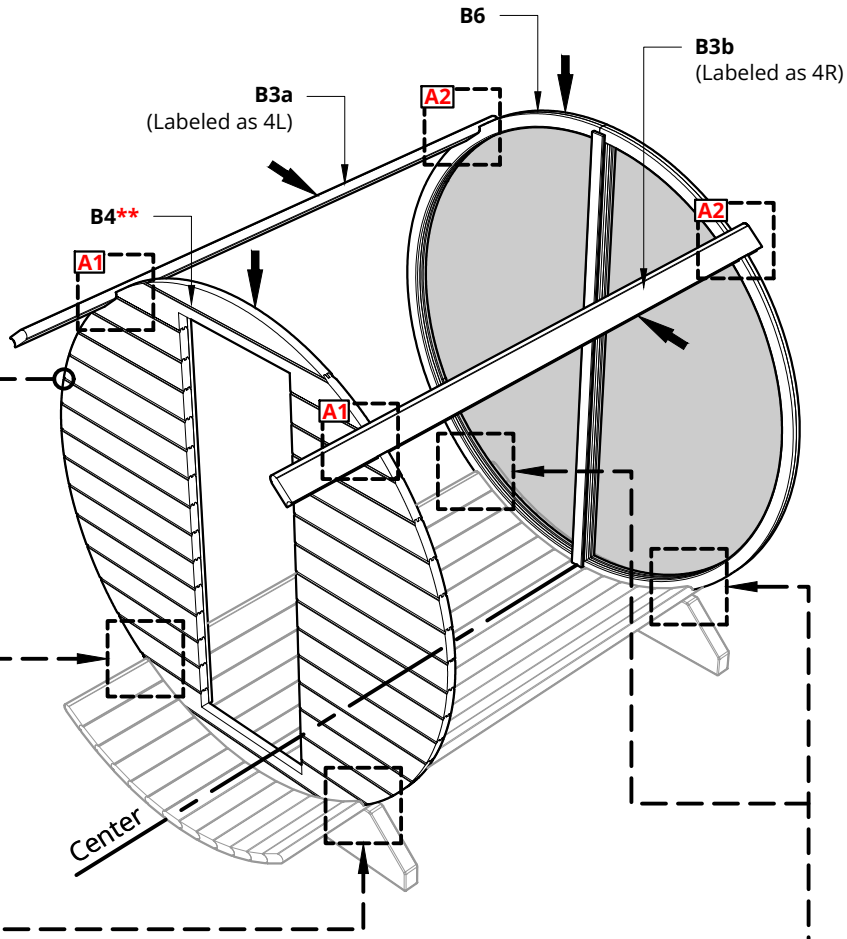

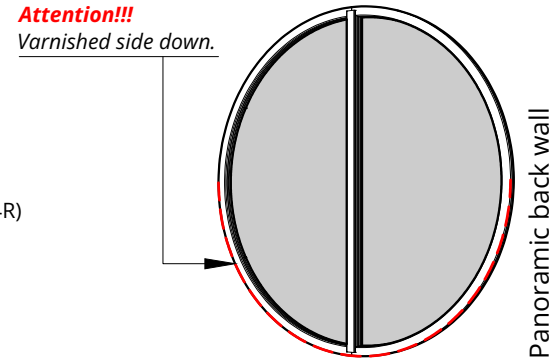

PAY ATTENTION TO THE DIRECTION OF THE WALLS!

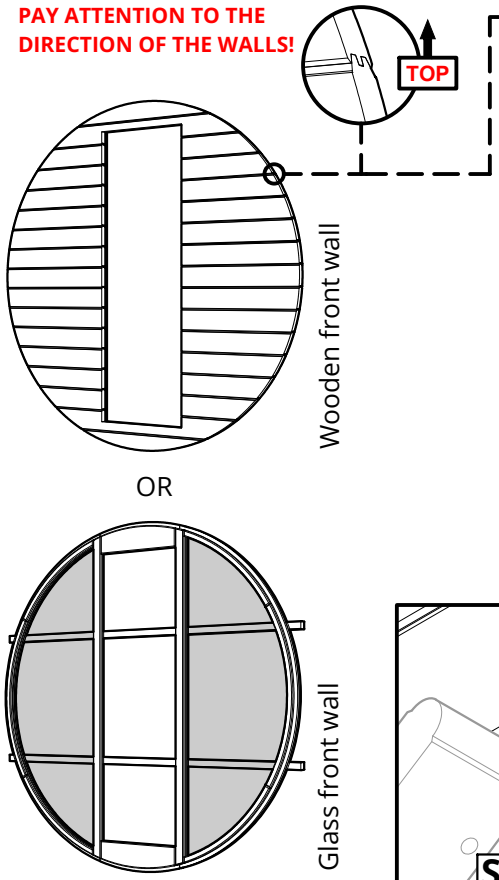

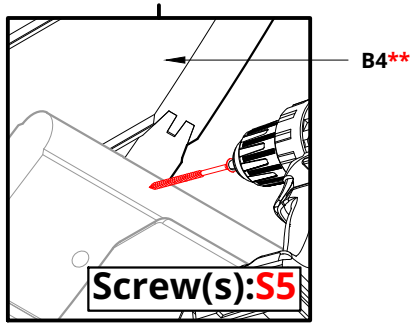

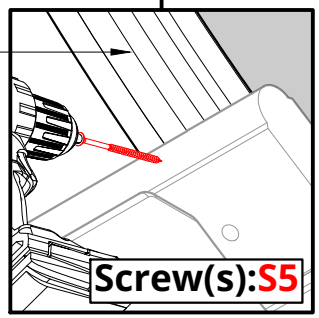

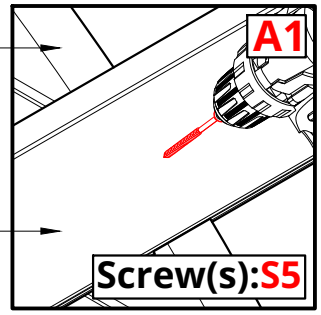

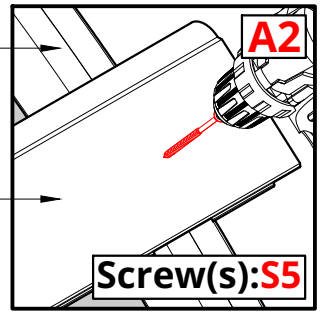

Lerra SAUNA SERIES

B4 depends on the choice of sauna front walls

Screw(s)*	Name:	Quantity:
	S5	104

*Screw dimensions - exterior construction detail list

Please countersink the screw head(s)!
Use a rubber mallet to tap the boards into place!
Please do not screw the screws in on the last whole boards immediately!
*** Depends on the choice of sauna wall!*
**** For glass wall only!*

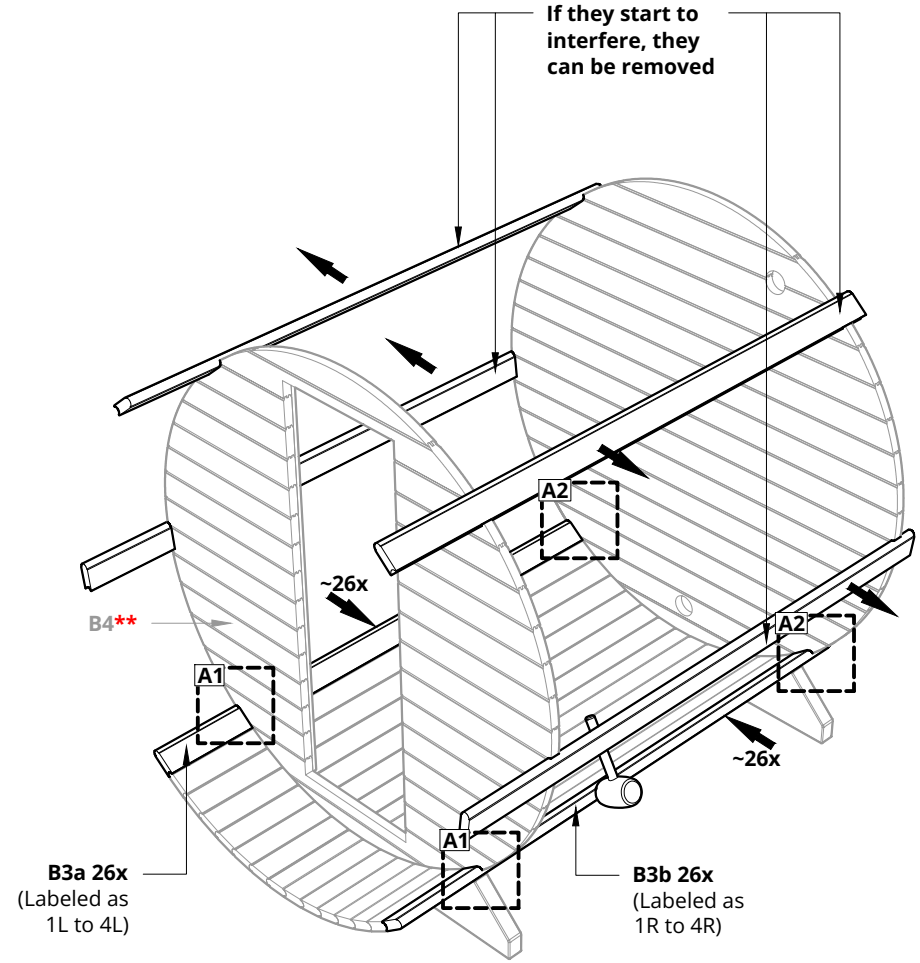

***B3a** left and **B3b** right*

layout of labeled boards

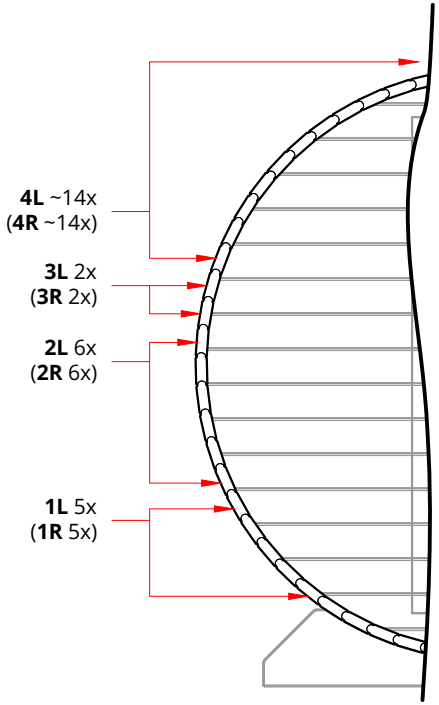

B4 depends on the choice of sauna front walls

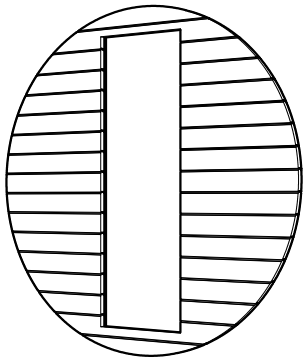

Wooden front wall

OR

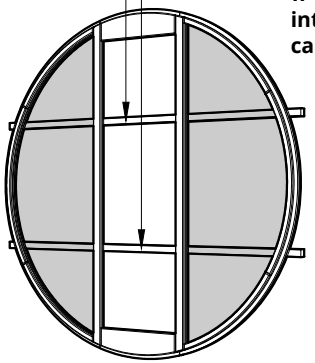

*** If they start to interfere, they can be removed

Glass front wall

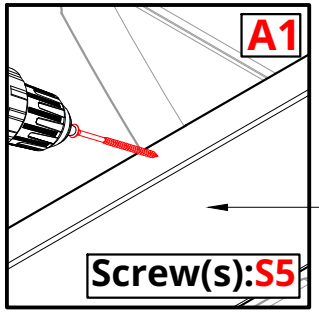

B3a left
(Labeled as 1L to 4L)
B3b right
(Labeled as 1R to 4R)

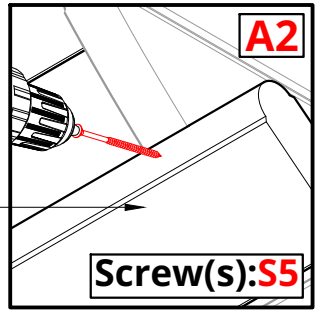

Lerra SAUNA SERIES

Measure the gap front and back, the dimensions can be different!

Divide the measurement by two and transfer the measurements to the last two boards. Connect the dimensions on the board with a line.

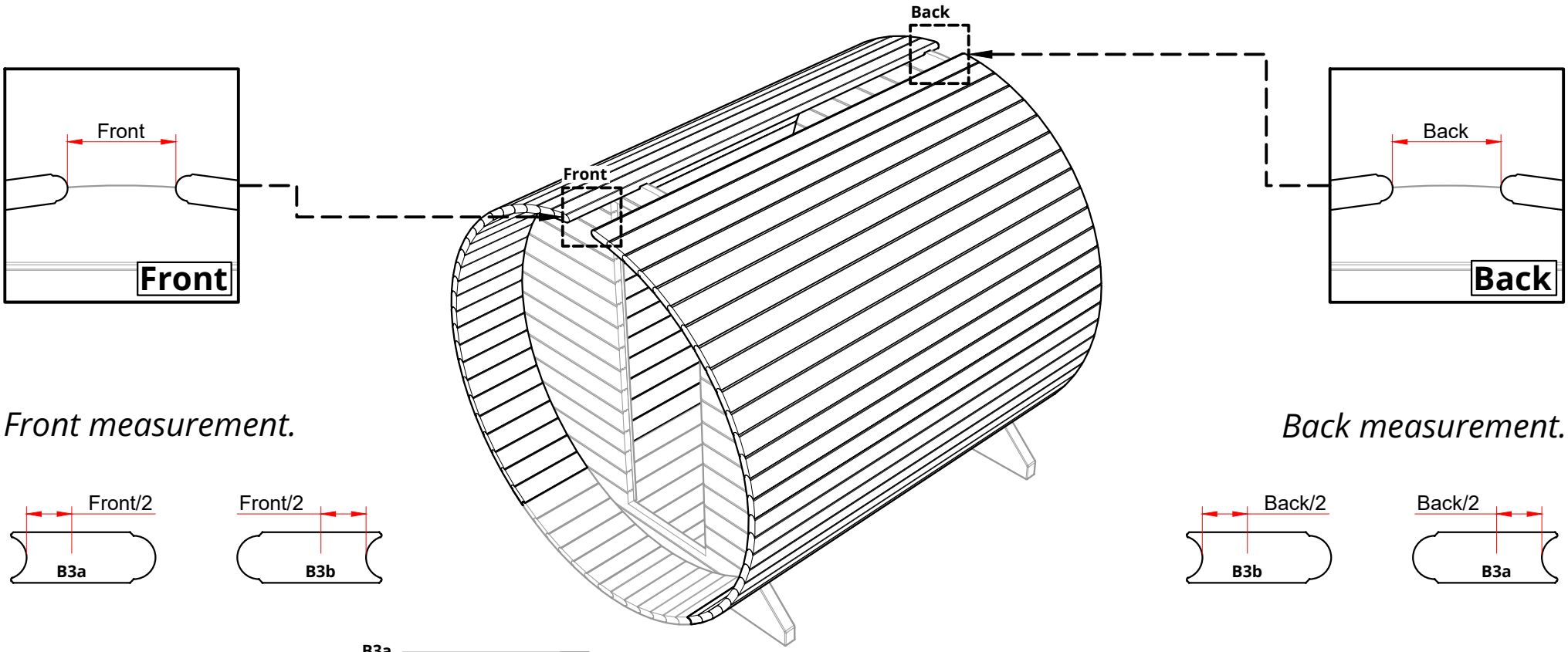

Front measurement.

Back measurement.

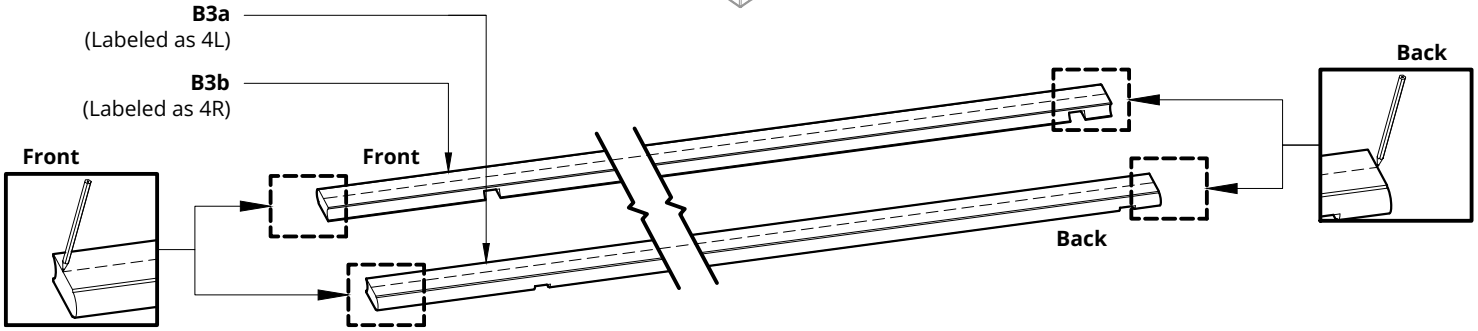

Screw(s)*	Name:	Quantity:
	S2...S7	9
	S5	8

*Screw dimensions - exterior construction detail list

Please countersink the screw head(s)!
Prepare the last board!
Use a rubber mallet to tap the boards in to the cap!

Cut along the marked line to cut off these ends. Glue the two cut boards with wood glue and connect them with 9 pieces of **S2...S7** screws ***(the length of the screws depends on the final width of the last two planks cut)***. Wipe off excess glue with a cloth and then use sandpaper to smooth out the gap.

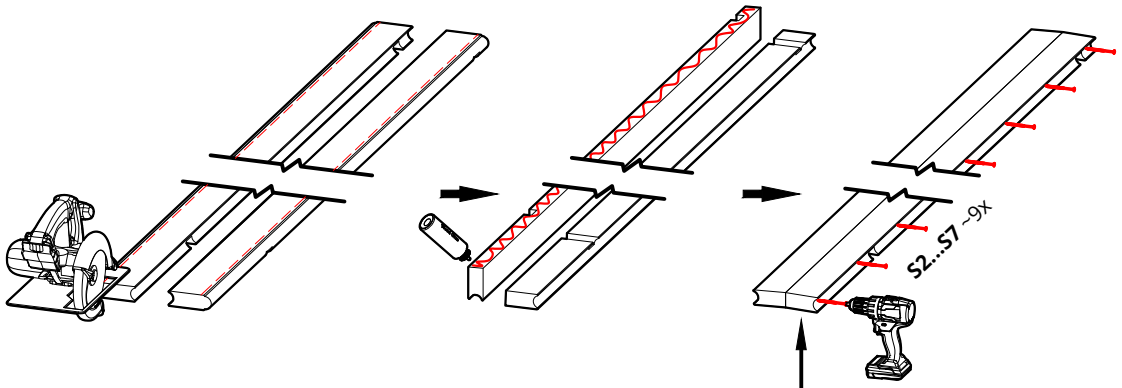

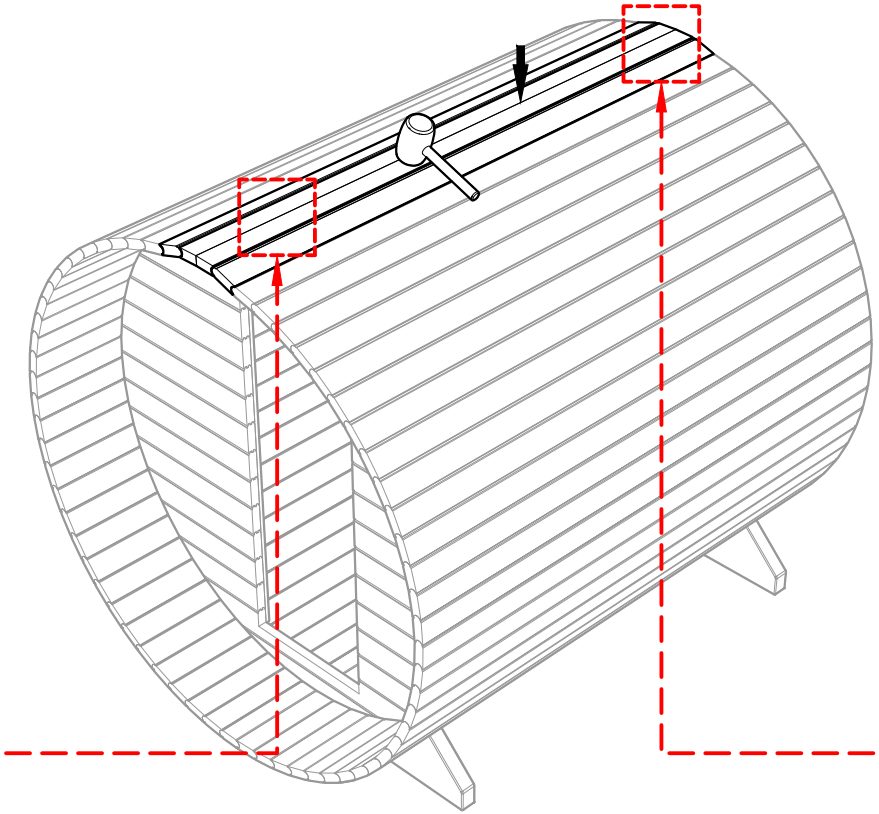

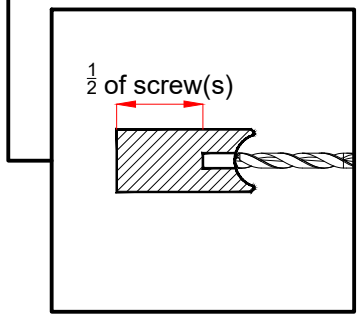

Suggestions!
Drill pockets for screws if the screws do not extend through

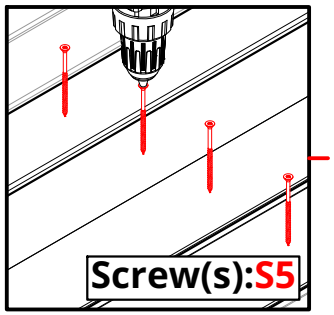

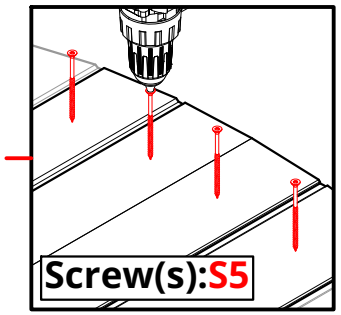

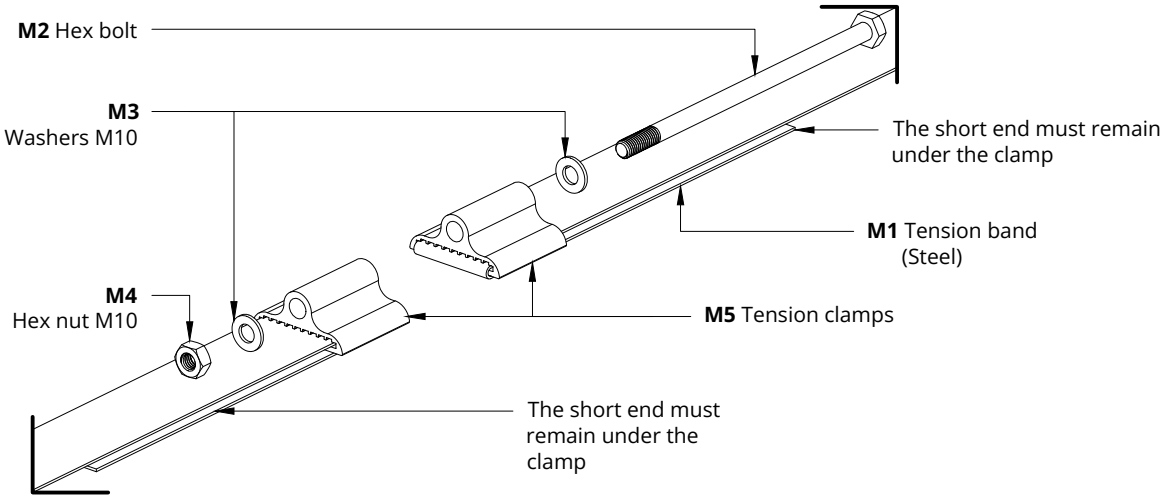

Place the tension bands M1 (Steel band(s)) around the side walls and thread the band(s) into the eyelet as follows (see sketch above).

Hex nuts and bolts must be tightened as long as the boards are stationary in all directions.

The tension band and clamps must be placed as shown in the picture below.

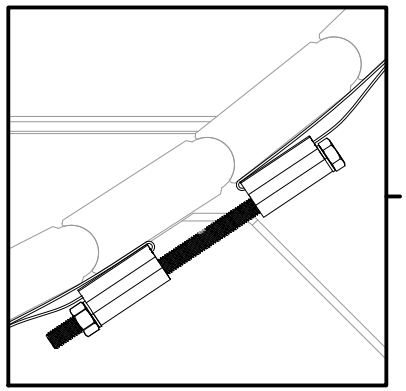

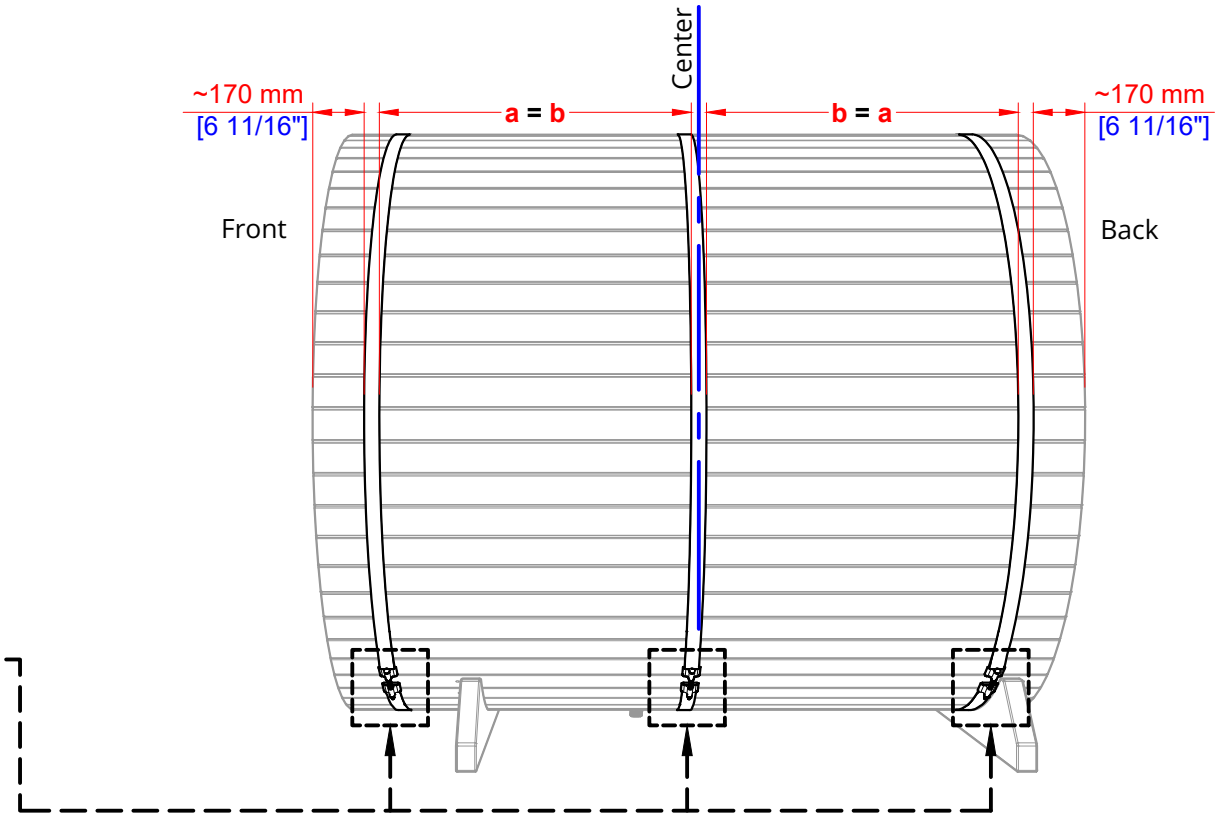

Screw(s)*	Name:	Quantity:
	S1	16

*Screw dimensions - exterior construction detail list

NB! use a level

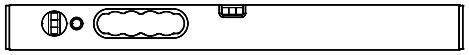

Dimensions and measurements		
Min. height - a	~1217 mm	~ 3'-11 15/16"
Max. height - b	~1120 mm	~ 3'-8 1/16"

Please countersink the screw head(s)! Height measurements are measured from a straight surface (ground) or from above the sauna!

Install the eaves edge (tin strip) **on the left and right!**

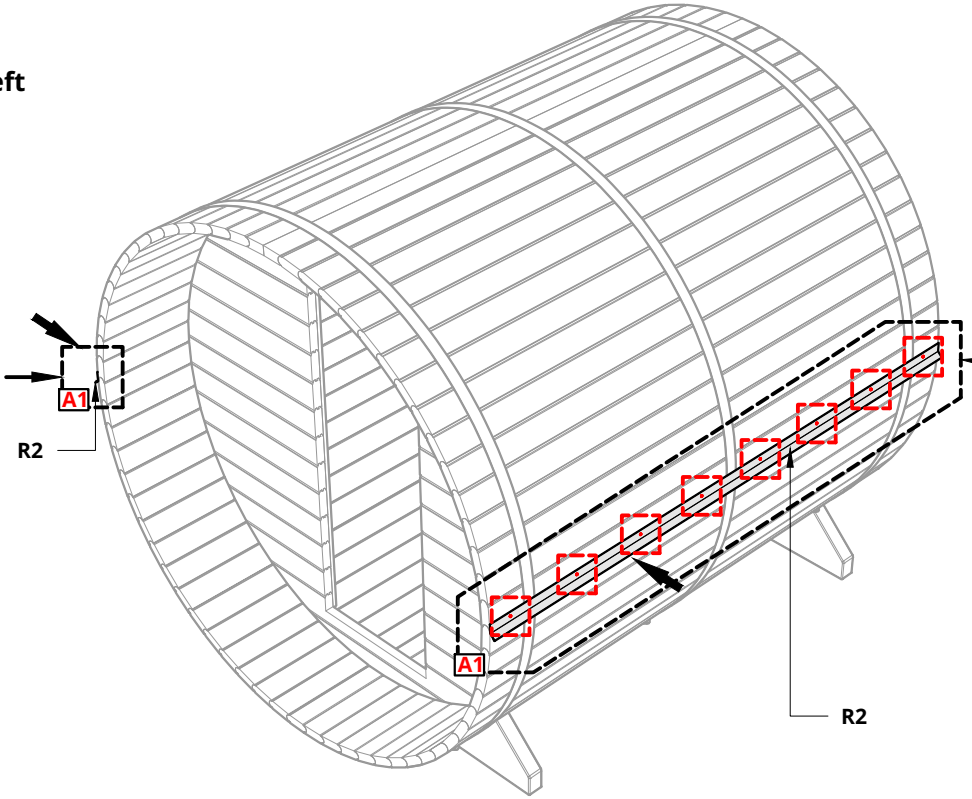

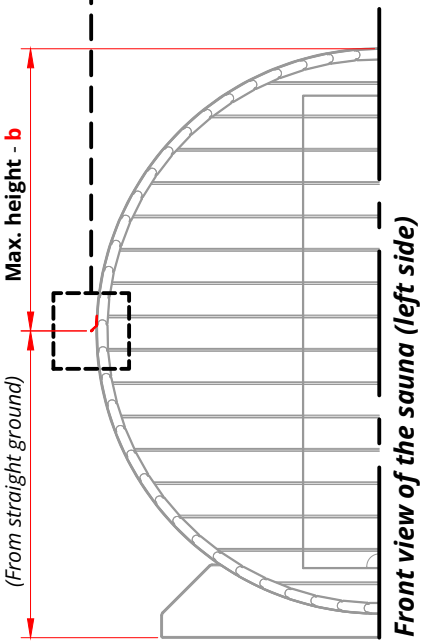

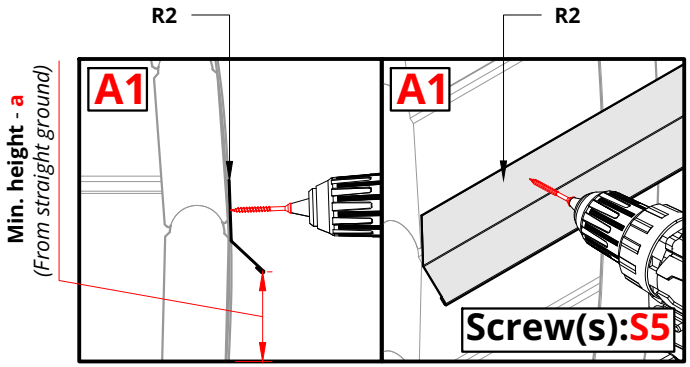

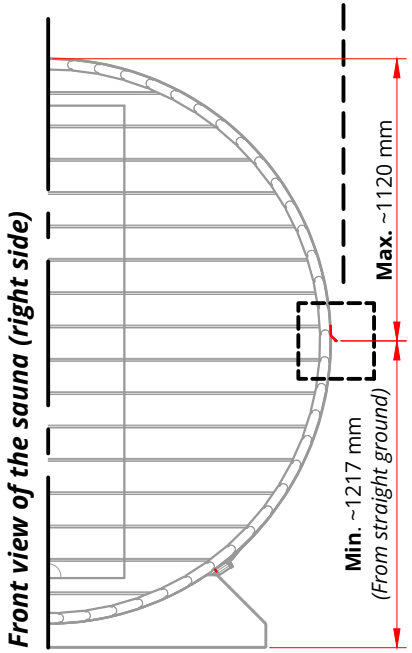

Lerra SAUNA SERIES

Hexagonal bitumen roof sheet row arrangement for Barrel Saunas.

The base row is installed first, then the first row, etc. up in the middle of the sauna. The sheets that remain over the edge of the sauna wall are cut off and, if possible, used for other rows.

The base row starts at the front end of the sauna, row 1 always starts offset from the front end.

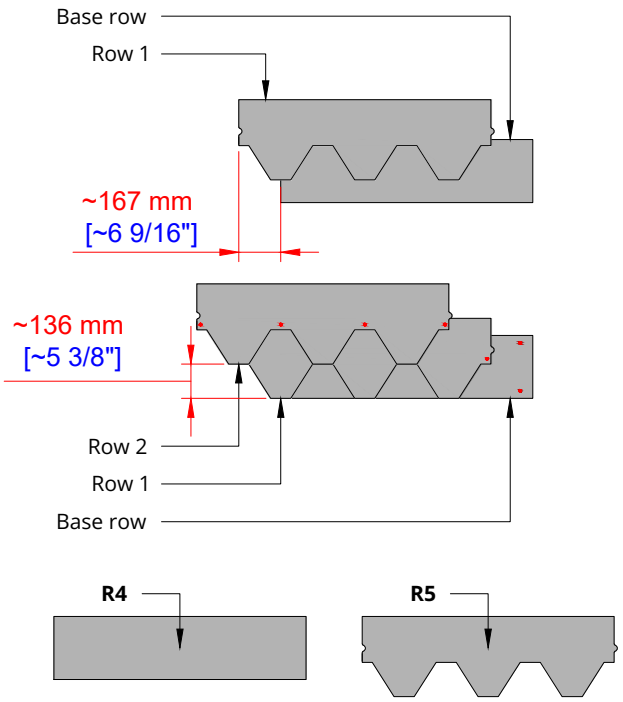

Lerra PLUS (Barrel 2.2x2.6 [8'-6 3/8"])	Qty. R4	10 pcs
	Qty. R5	72 pcs

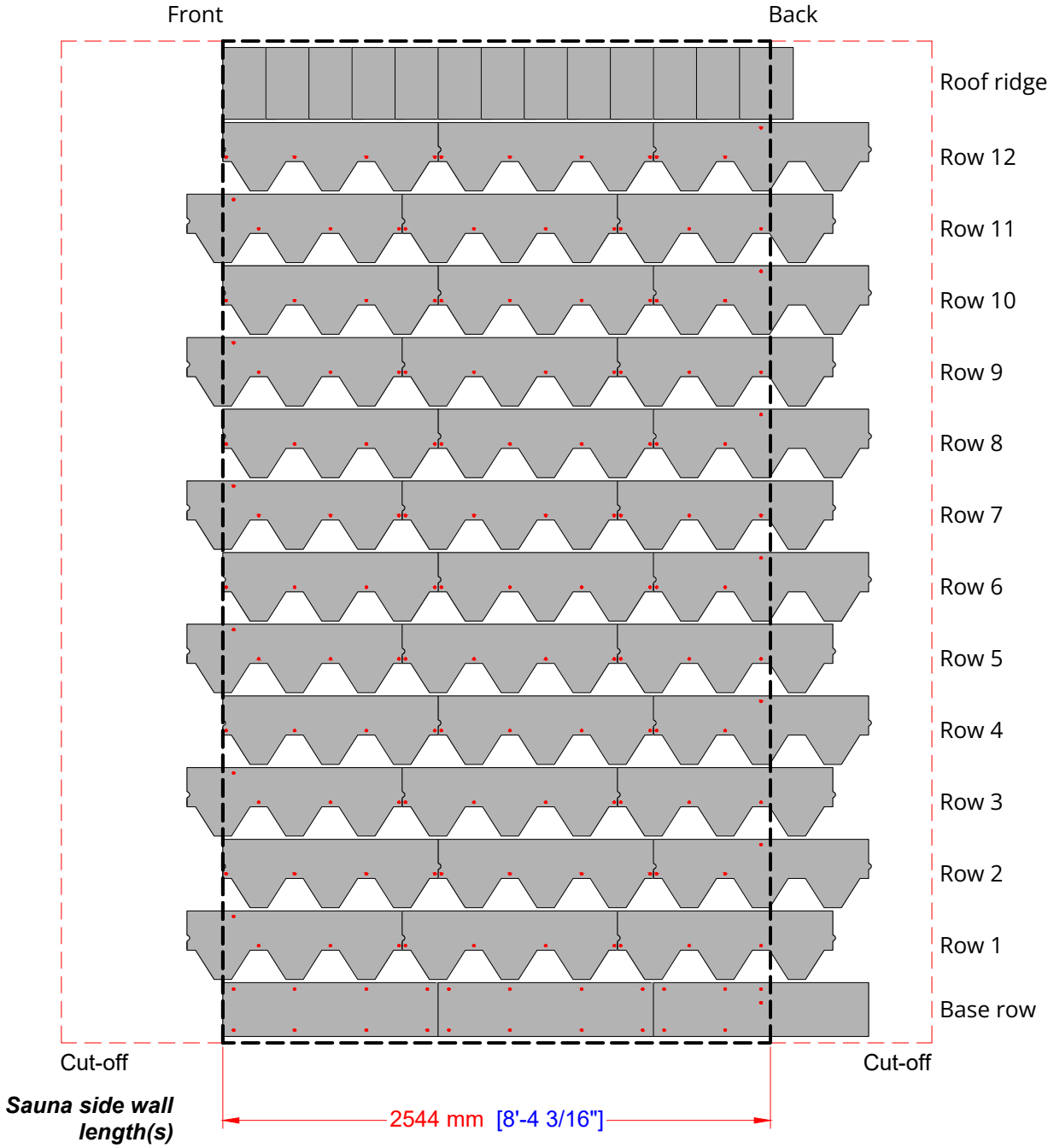

Nail(s)*	Name:	Quantity:
	R6	~44

*Nail dimensions - exterior construction detail list

Sheets are self-adhesive, for better adhesion use a heat source!

The base row starts from the front!
Cut sheets that extend over the edge! (It is only necessary to cut if they extend over the edge!)
Suitable leftovers can be used!
Repeat these steps on the other side as well!

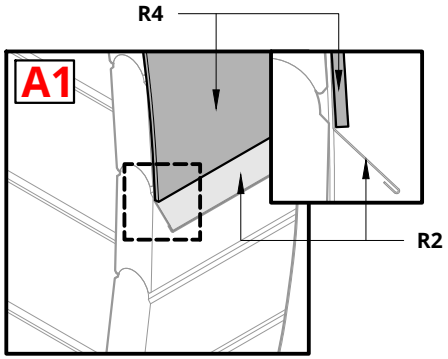

Dimensions and measurements		
a	190 mm	~ 0'-7 1/2"
b	50 mm	~ 0'-1 15/16"
c	~283 mm	~ 0'-11 1/8"
d	~333 mm	~ 1'-1 1/8"
e	30 mm	~ 0'-1 3/16"

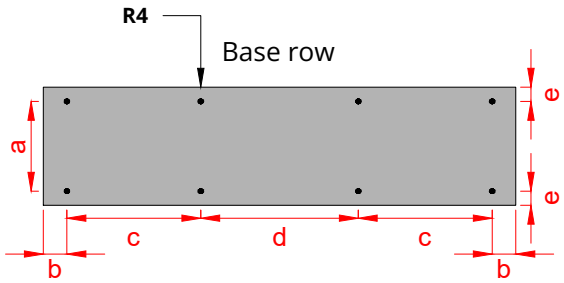

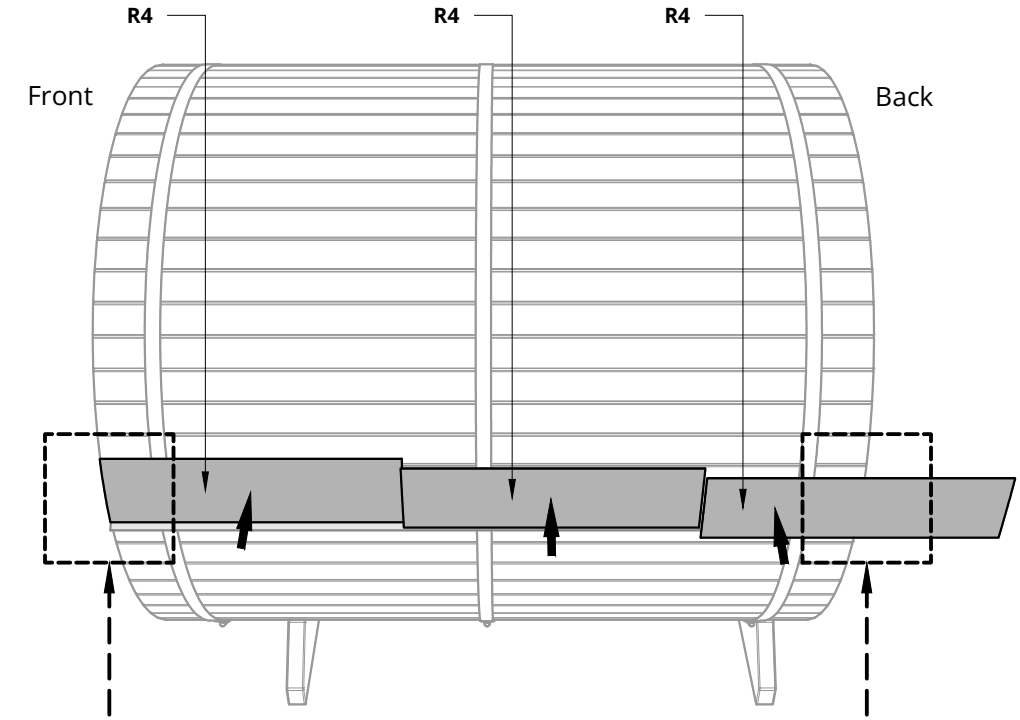

It is only necessary to cut if they extend over the edge!

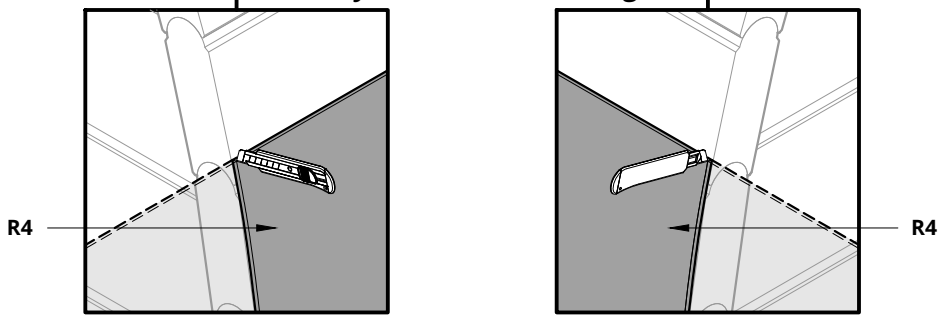

Nail(s)*	Name:	Quantity:
	R6	~270

*Nail dimensions - exterior construction detail list

Sheets are self-adhesive, for better adhesion use a heat source!

The 1.row starts at the front and offset!
Cut sheets that extend over the edge!
Suitable leftovers can be used!
Repeat these steps on the other side as well!

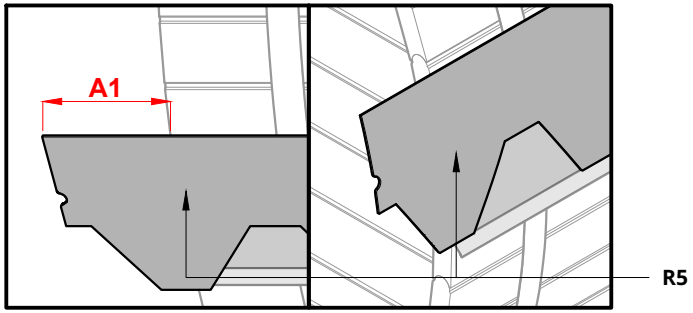

Dimensions and measurements		
A1	~167 mm	~ 0'-6 9/16"
a	161 mm	~ 0'-6 5/16"
b	157 mm	~ 0'-6 3/16"
c	~318 mm	~ 1'-0 9/16"
d	~333 mm	~ 1'-1 1/8"
e	15 mm	~ 0'-0 9/16"

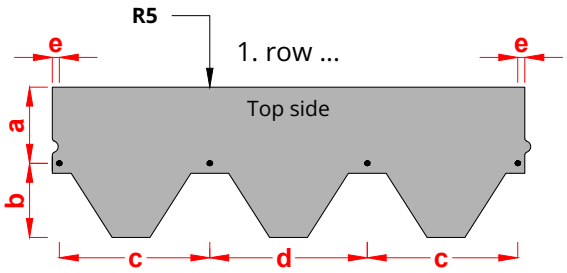

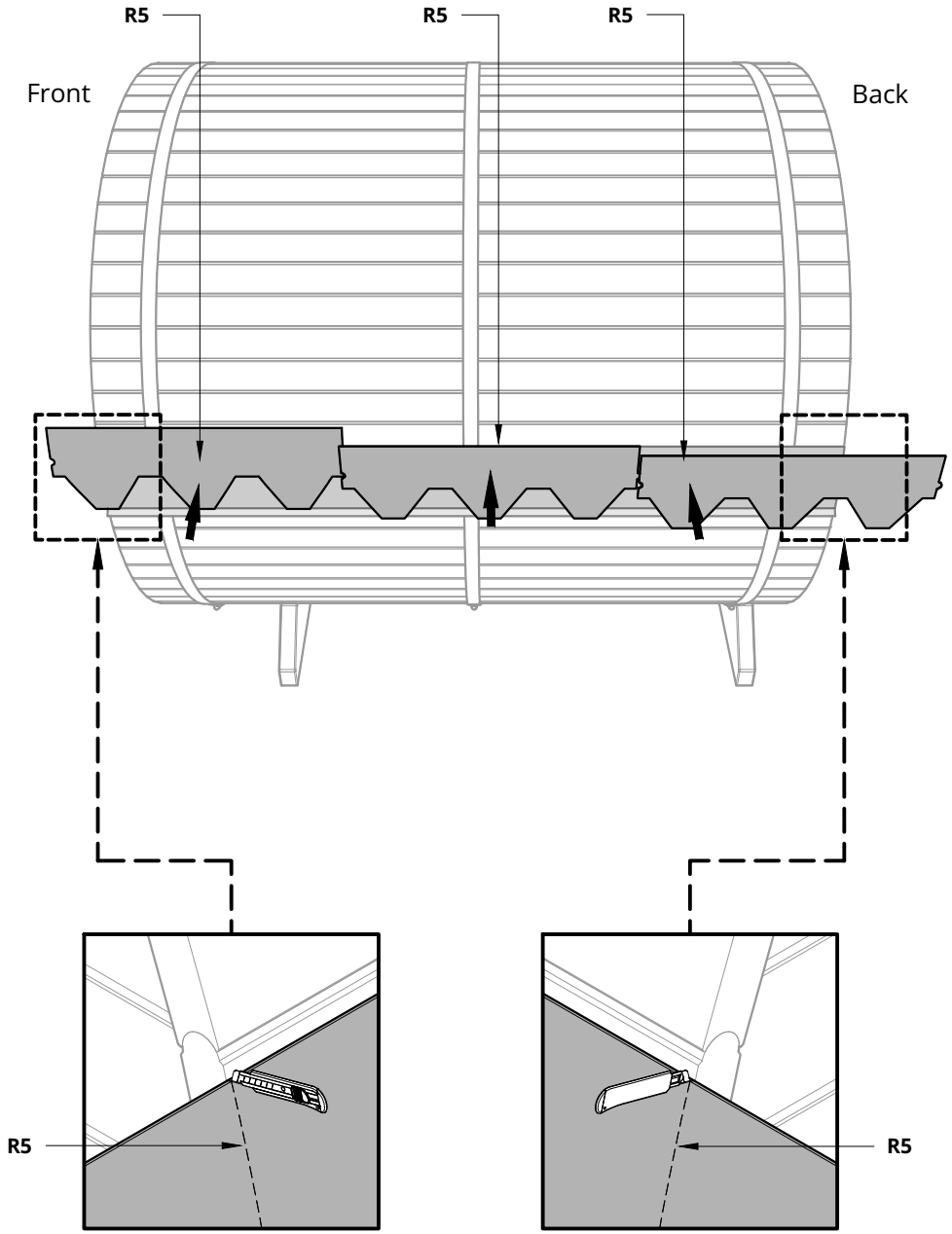

Lerra SAUNA SERIES

Nail(s)*	Name:	Quantity:
	R6	~48

*Nail dimensions - exterior construction detail list

Sheets are self-adhesive, for better adhesion use a heat source!

The roof ridge can be started from the back end of the sauna or from the front end!
Cut sheets that extend over the edge!
On the last piece, use bitumen sealant, not nails!

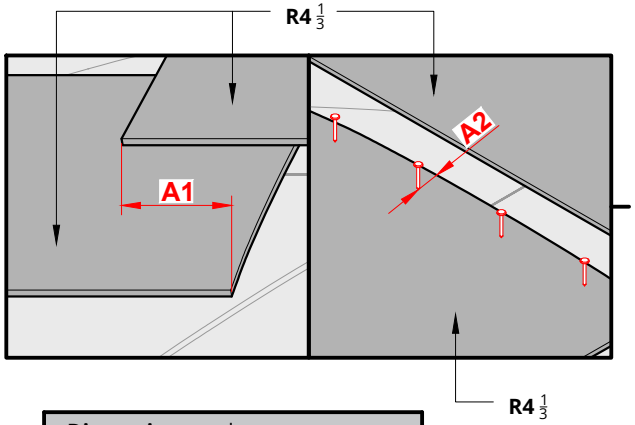

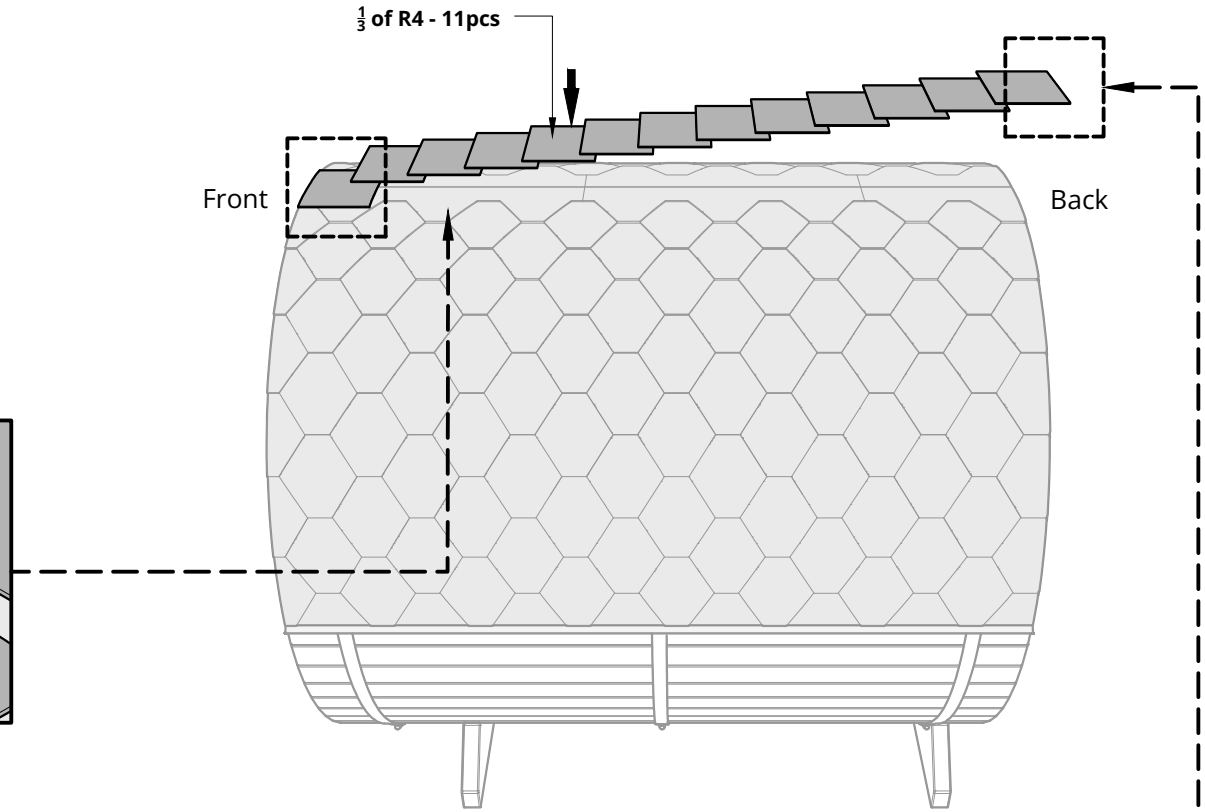

Dimensions and measurements		
A1	~50 mm	~ 0'-1 15/16"
A2	25 mm	~ 0'-1"
a	~333 mm	~ 1'-1 1/8"

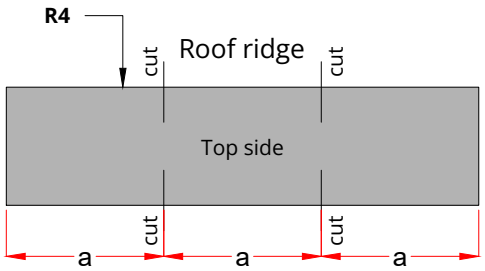

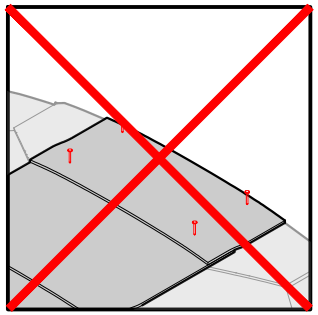

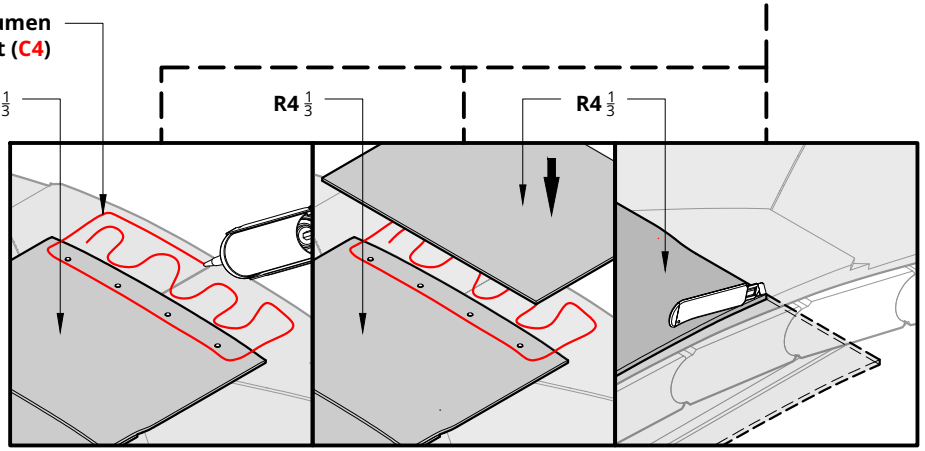

Screw(s)*	Name:	Quantity:
	S6.1	20

*Screw dimensions - exterior construction detail list

Please countersink the screw head(s)!
Install the cover boards R7, starting from the middle at the top!
Attach 9 cover boards at the front and back of the sauna!
Fix each with 2 screws!
Fill the gaps between the bitumen sheets and covering boards in front and back with bitumen sealant!

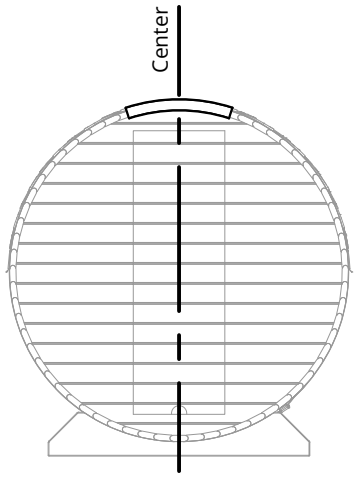

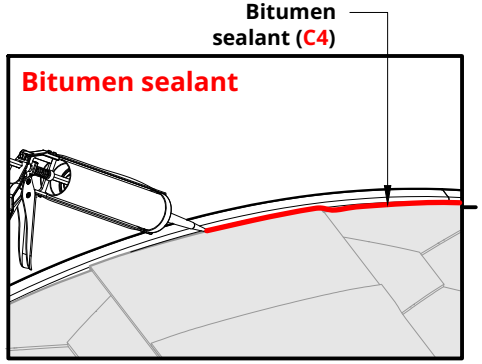

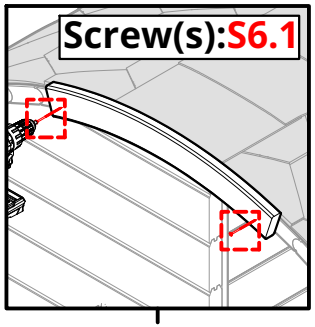

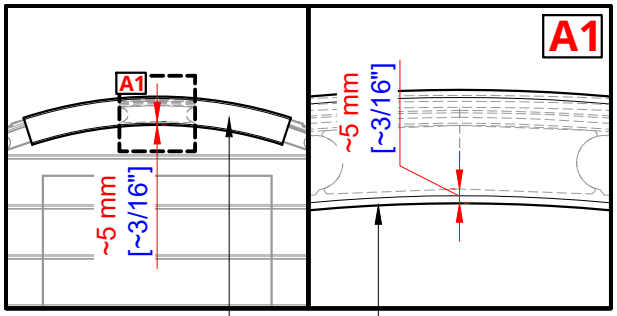

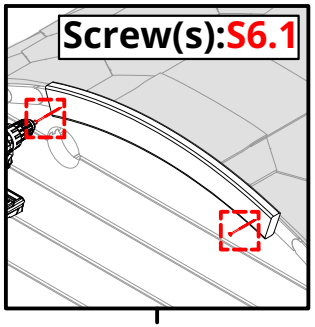

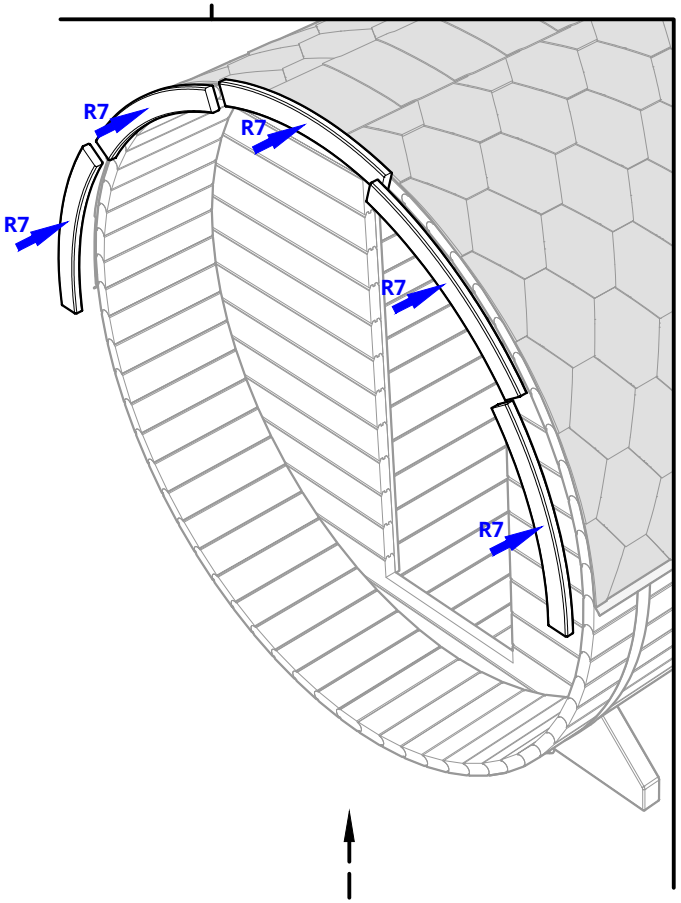

Front view of the sauna

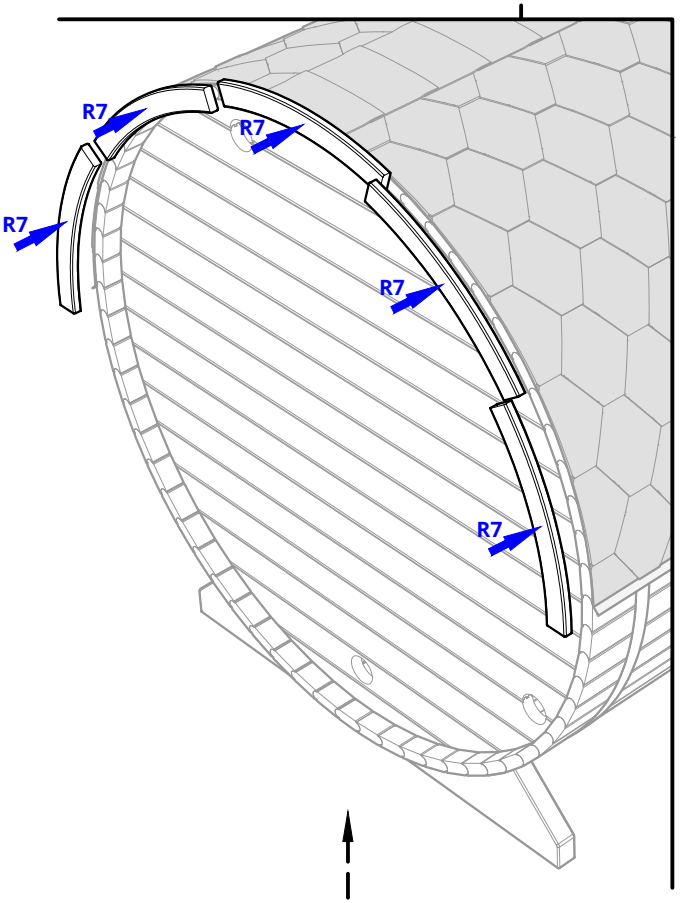

Back view of the sauna

Screw(s)*	Name:	Quantity:
	S1	18

*Screw dimensions - exterior construction detail list

Install The inner and outer ventilation grilles V2, adjustable cover V3!

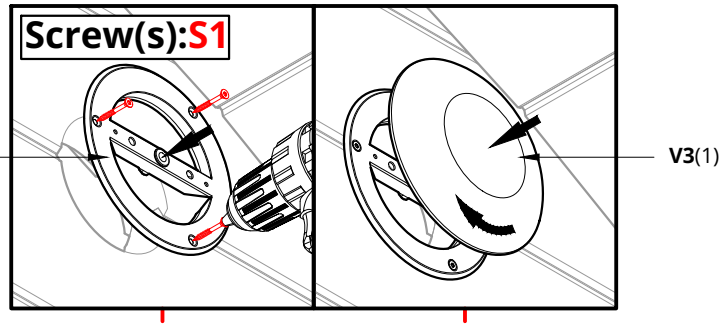

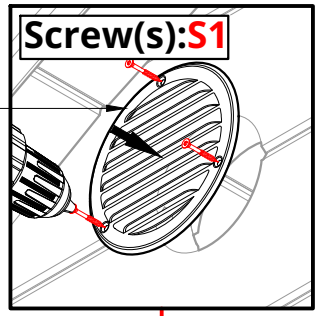

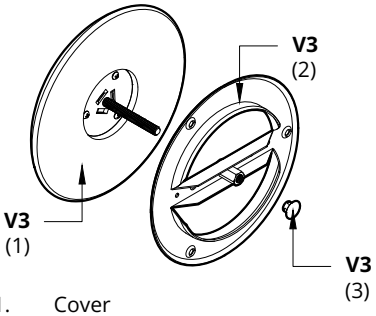

1. Cover
2. Frame
3. Plug

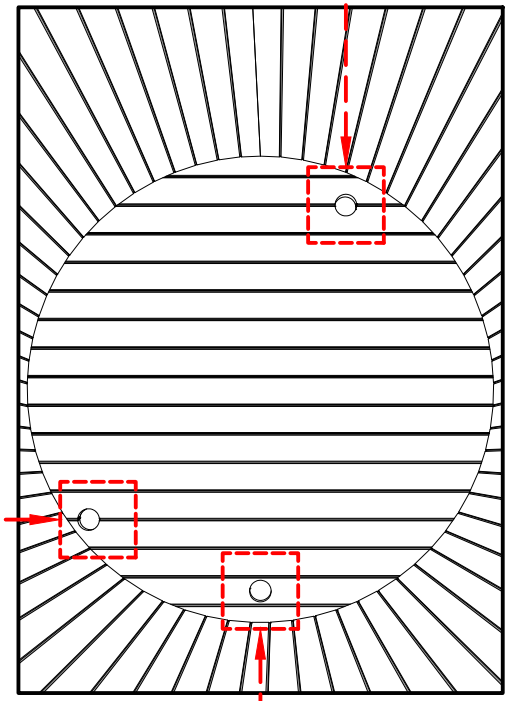

***Front view** (Inside of the sauna)*

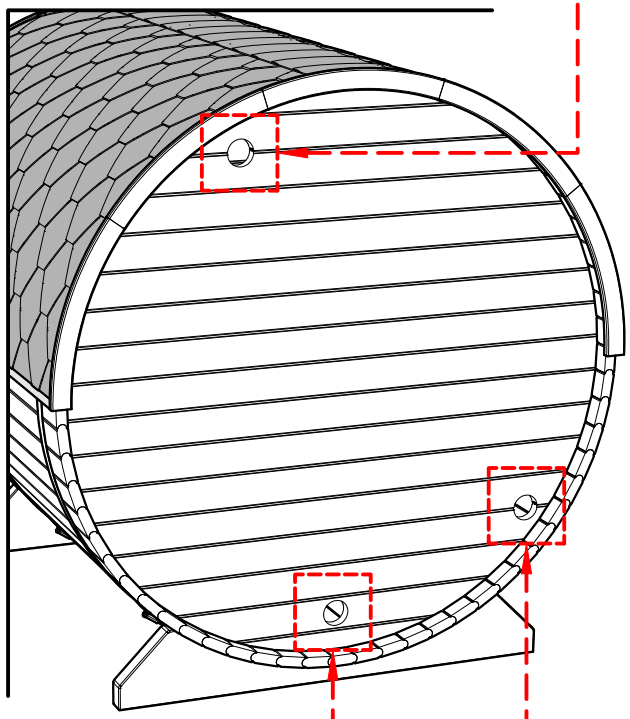

Back view of the sauna

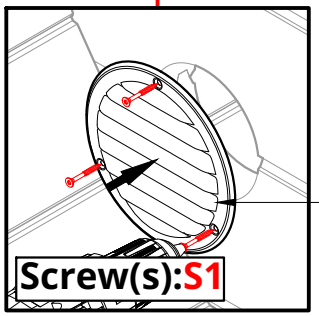

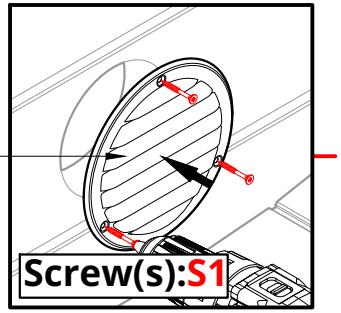

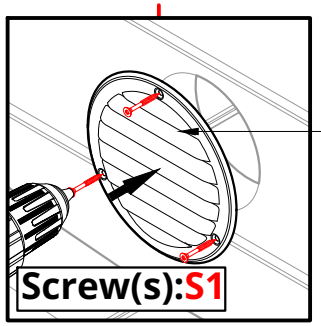

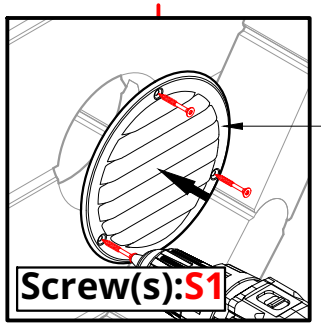

Screw(s)*	Name:	Quantity:
	S6.2	16
	S2	14

*Screw dimensions - exterior construction detail list

NB! use a level

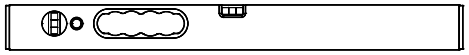

Please countersink the screw head(s)!

Insert hole cover P if they are not attached and
Install the door handle!
Remove the front wall connection strips!
Install the door from inside!
Install door moldings!

Suggestions!
Drill small hole(s) for the screws in the door moldings before screwing.

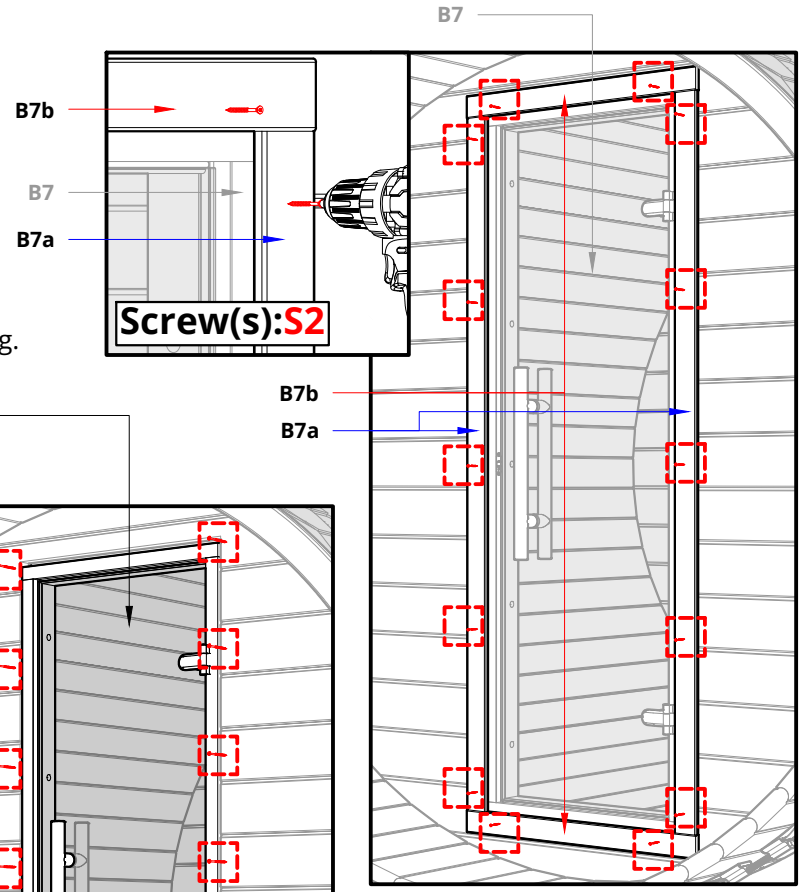

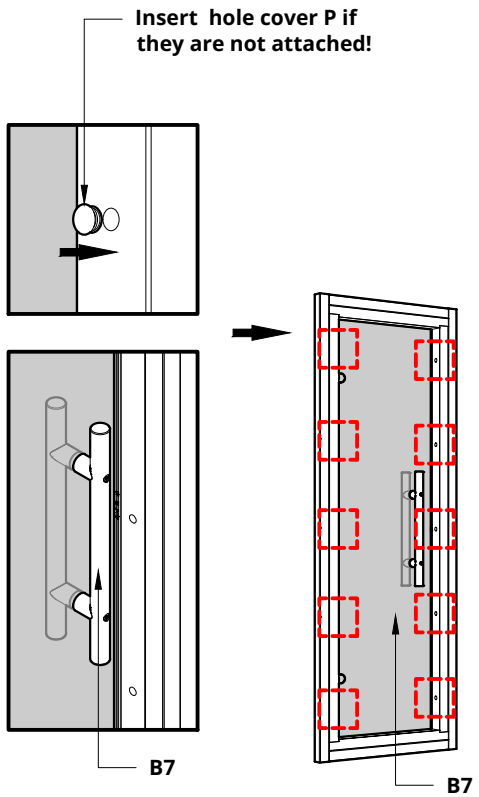

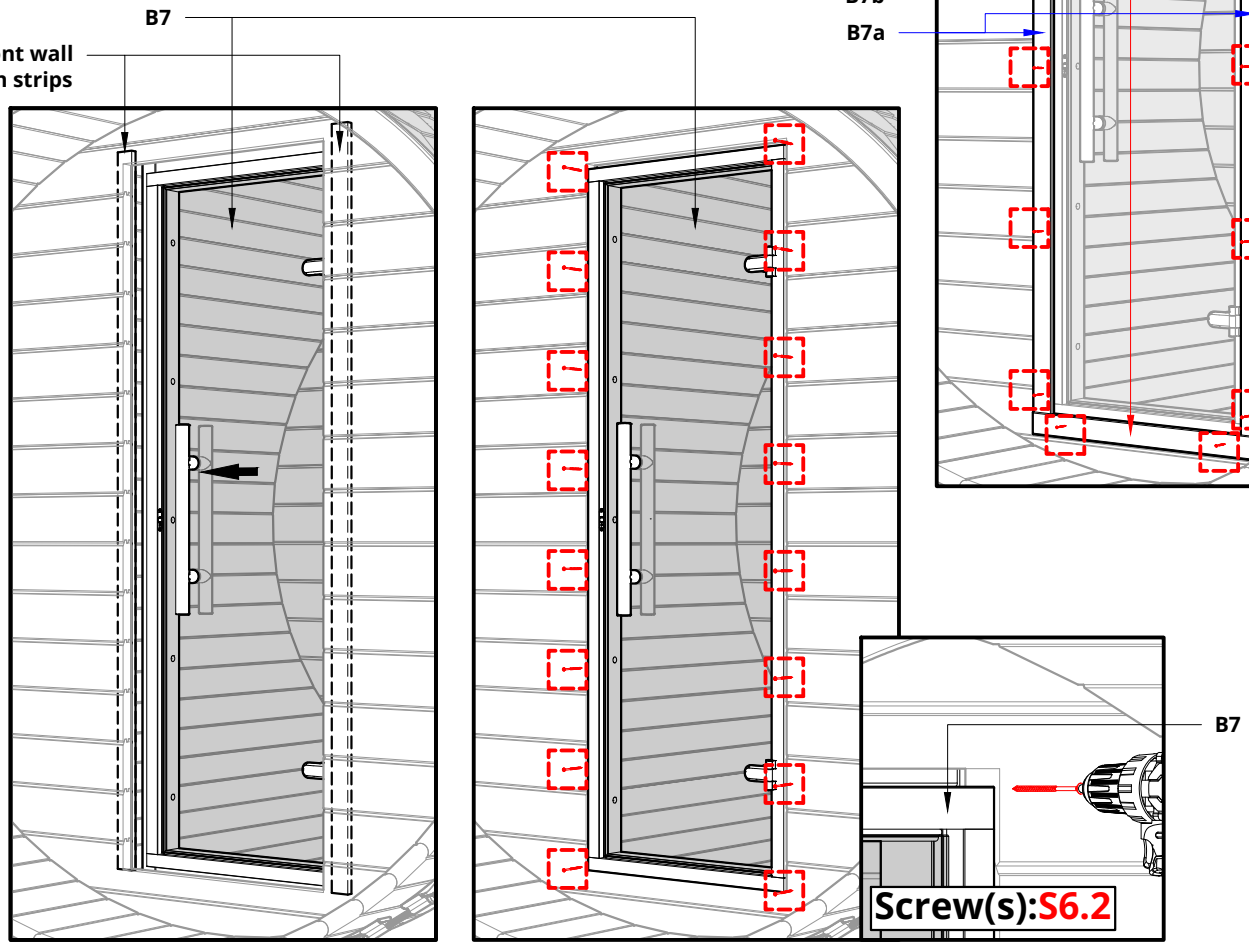

Screw(s)*	Name:	Quantity:
	S6.2	14
	S3.2	14

*Screw dimensions - exterior construction detail list

NB! use a level

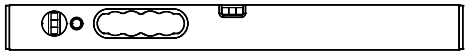

Door installation for the front glass wall!
Please countersink the screw head(s)!

Insert hole cover P if they are not attached and install the door handle!
Install the door from the inside!
Install door moldings!

Suggestions!
Drill small hole(s) for the screws in the door moldings before screwing.

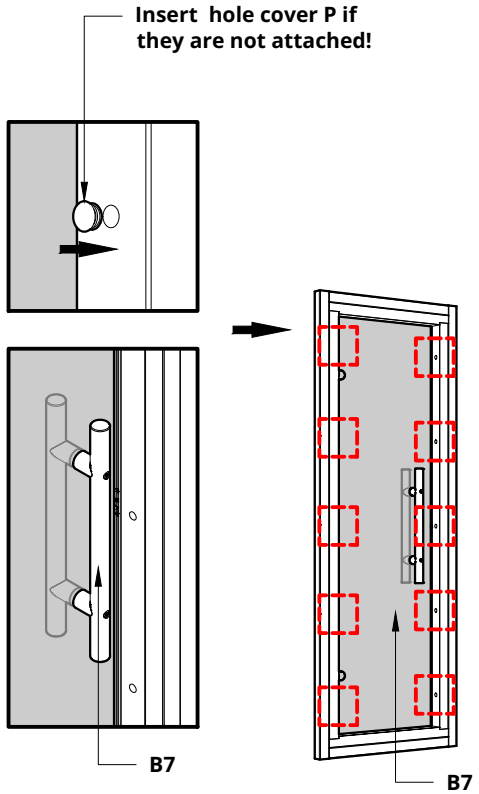

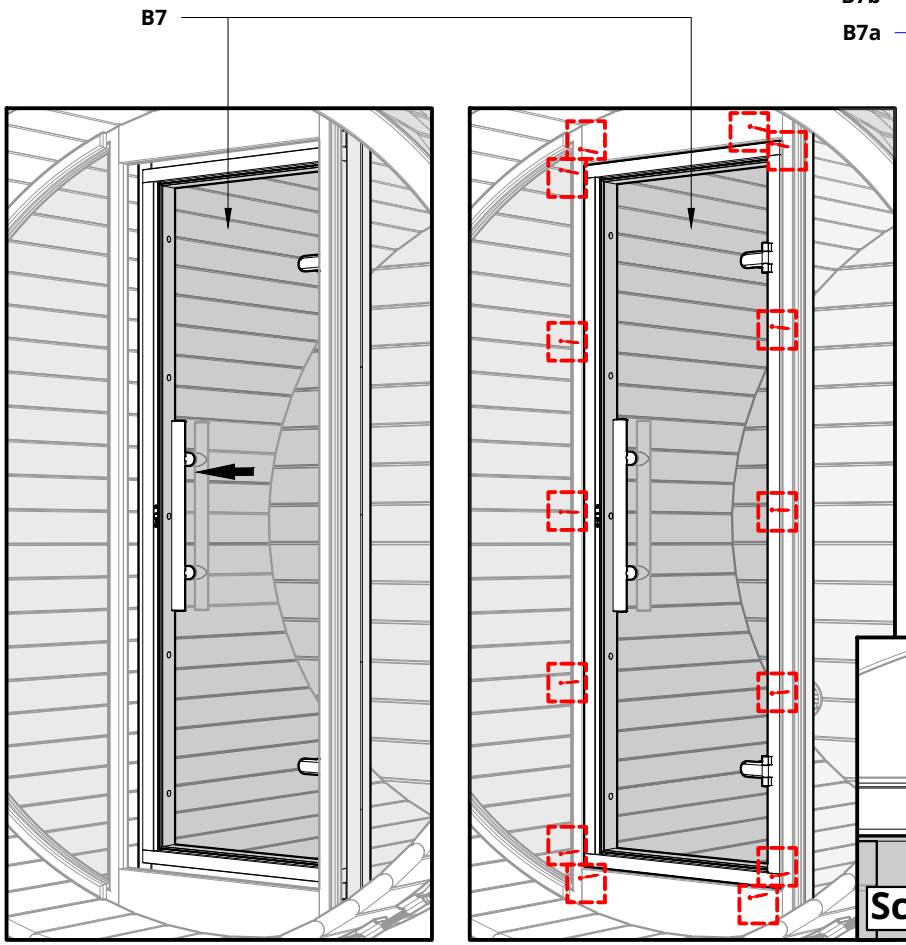

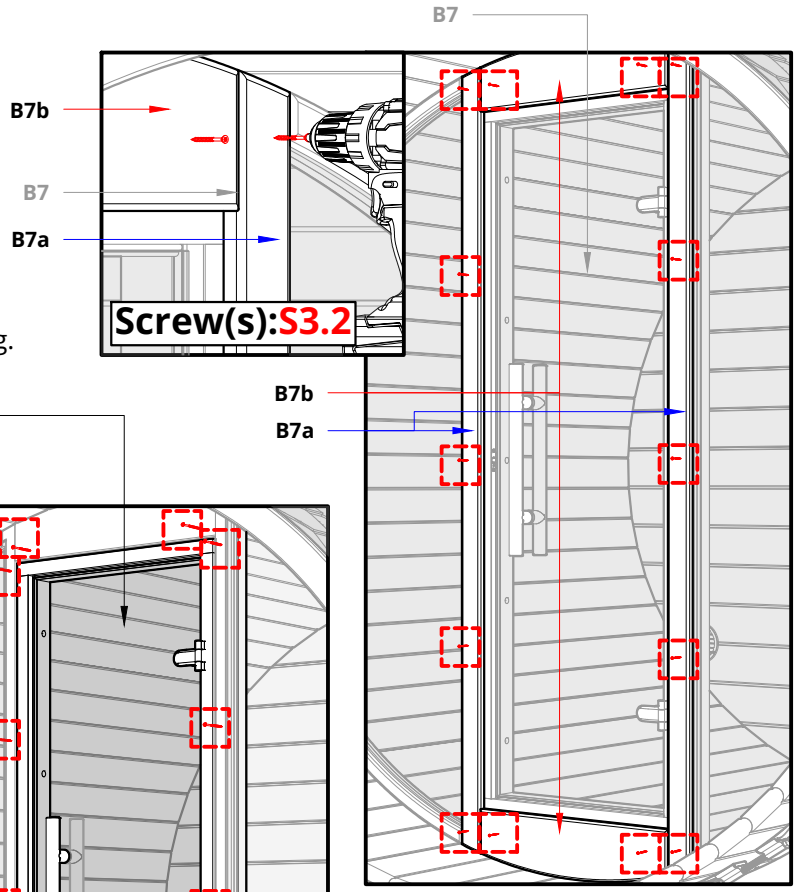

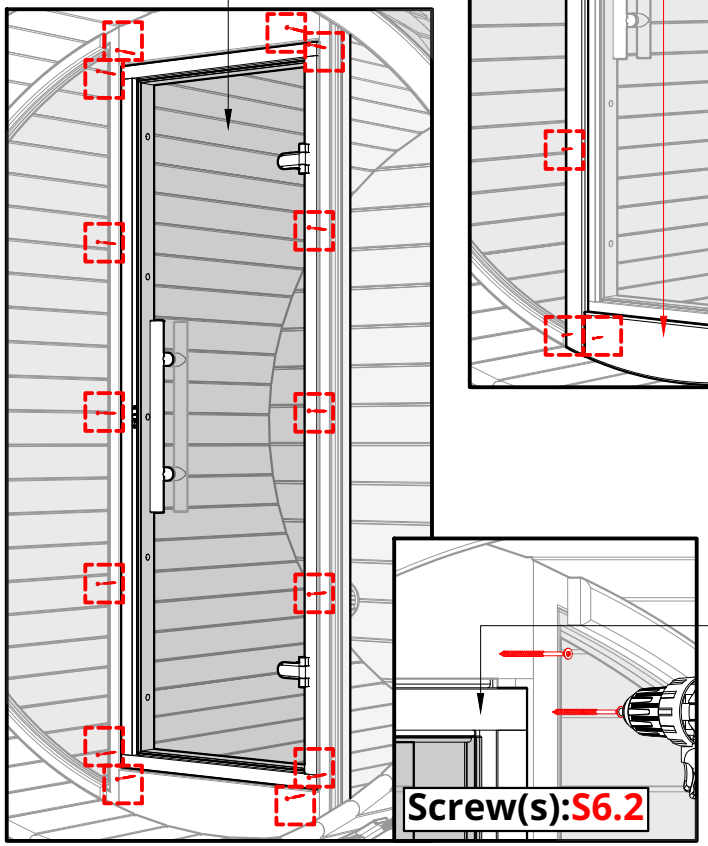

Screw(s)*	Name:	Quantity:
	S7	16

*Screw dimensions - Bench assembly detail list

NB! use a level

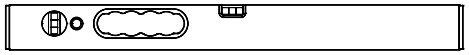

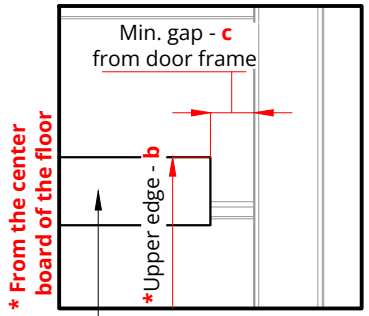

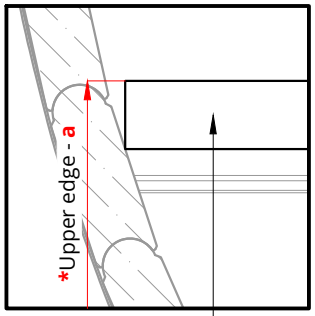

Please countersink the screw head(s)!
Measured from the center board of the floor!
Use glue between the square wood K... and the wall!

Install square woods for benches!

Dimensions and measurements		
a	808 mm	~ 2'-7 13/16"
b	378 mm	~ 1'-2 7/8"
c	29 mm	~ 0'-1 1/8"
d	~112 mm	~ 0'-4 3/8"

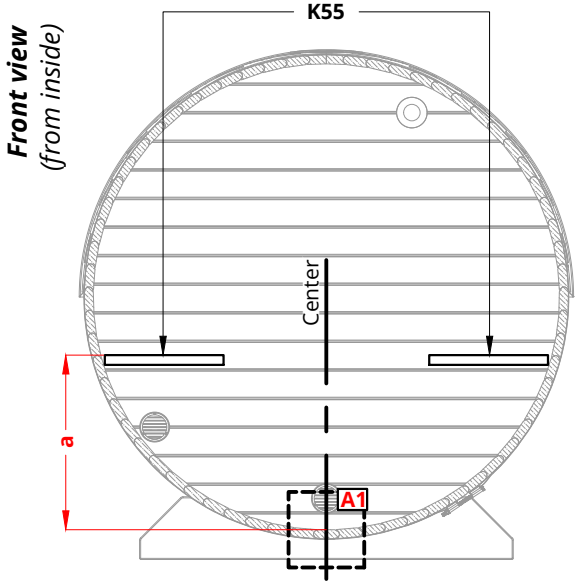

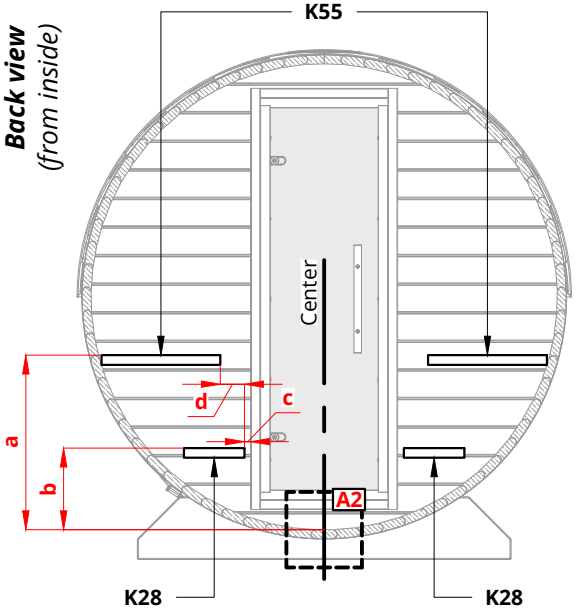

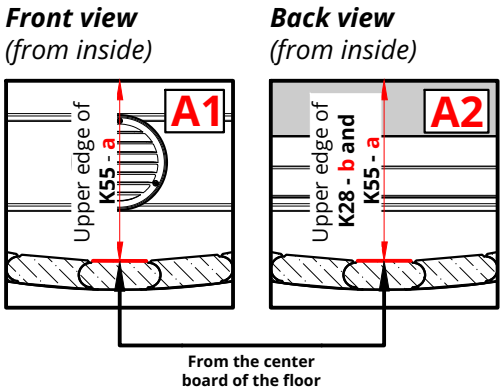

Notice!

Drill 4mm hole in the K... square woods before screwing.

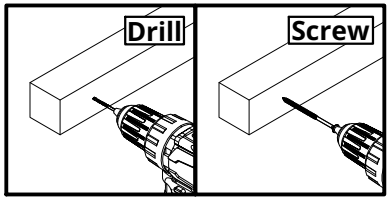

Use glue!

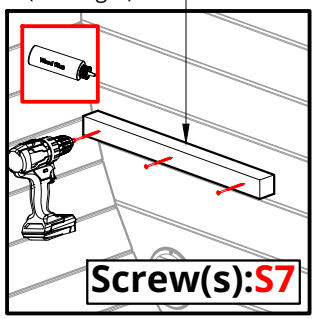

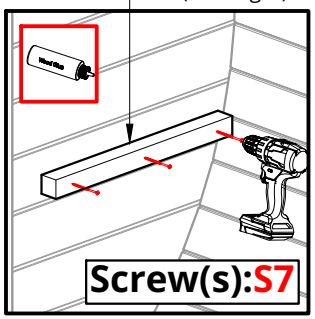

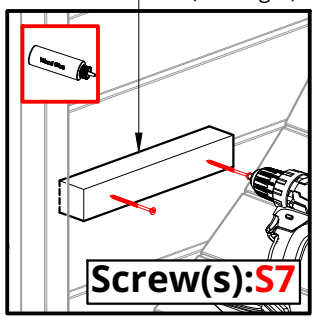

Lerra SAUNA SERIES

Screw(s)*	Name:	Quantity:
	S7	16

*Screw dimensions - Bench assembly detail list

NB! use a level

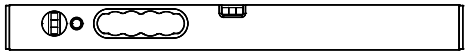

Please countersink the screw head(s)!
Use glue between the square wood K... and the wall!

Install the upper bench, but do not screw it in immediately!
Place the square wood K10 it under the bench as shown in the picture and mark the location!
Move the bench aside to install K10 where it was marked!
Put the bench back and fasten it!

Repeat these steps on the other side as well!

Dimensions and measurements		
a	537 mm	~ 1'-9 1/8"
b	604 mm	~ 1'-11 3/4"

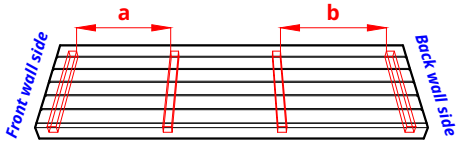

Upper bench **I1a** Left

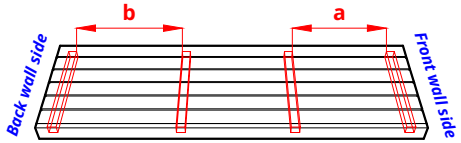

Upper bench **I1b** Right

Pay attention!

Notice!

Drill 4mm hole in the K... square woods before screwing.

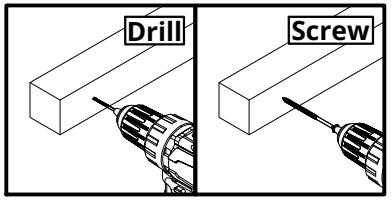

Use glue!

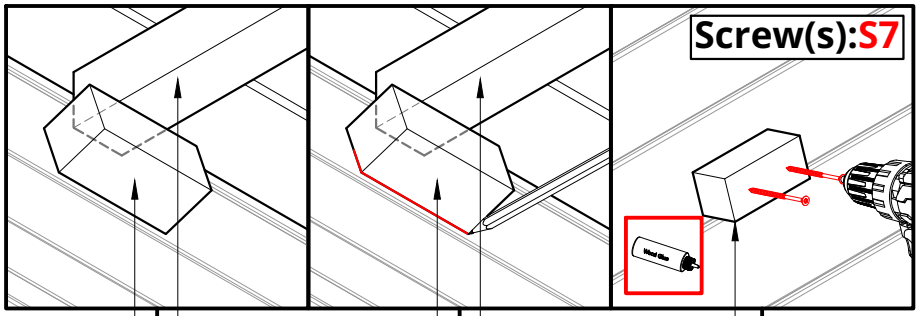

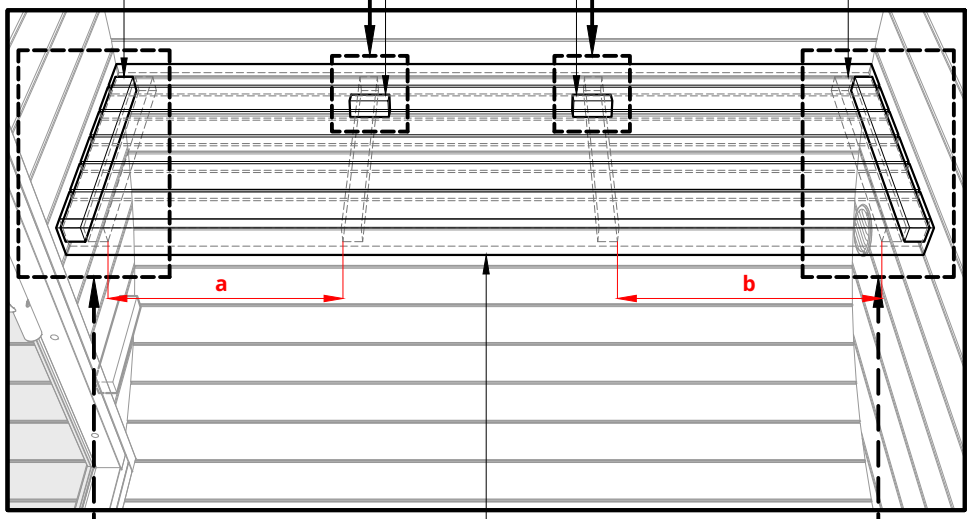

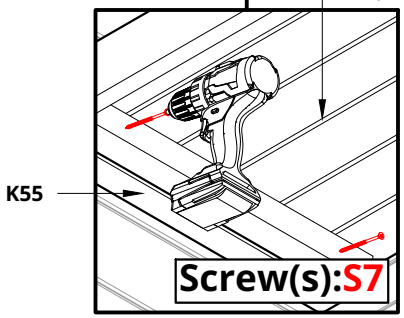

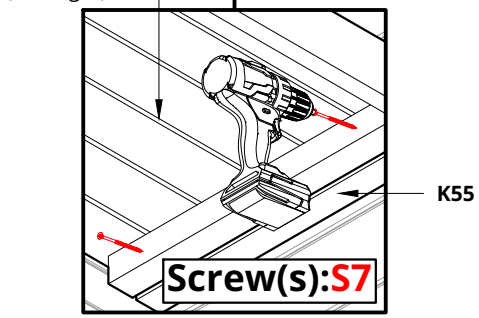

Lerra SAUNA SERIES

6.1.2

Screw(s)*	Name:	Quantity:
	S7	2
	S5	6

*Screw dimensions - Bench assembly detail list

NB! use a level

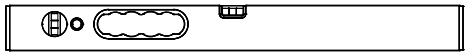

Please countersink the screw head(s)!
Use glue between the square wood(s) K...!
The square wood K20 and K60 are longer and must be cut to the correct size!

Measure the position of the upper bench leg K60!
Mark the position of the bench leg K60!
Measure the length of the bench leg K60 from the marked position downwards!
Cut bench leg to the correct size!
Install bench leg K60!
Measure the height of lower bench leg K20!
Cut bench leg to the correct size and install it!

Repeat these steps on the other side as well!

Dimensions and measurements		
a	430 mm	~ 1'-4 15/16"
b	45 mm	~ 0'-1 3/4"
c	~25 mm	~ 0'-1"

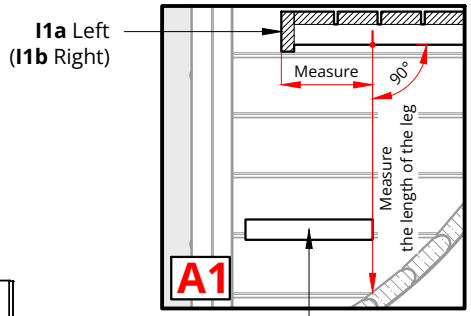

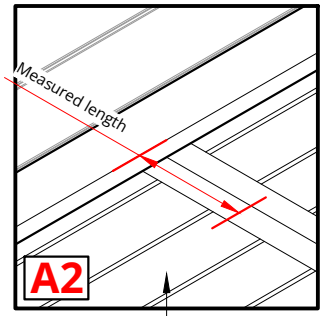

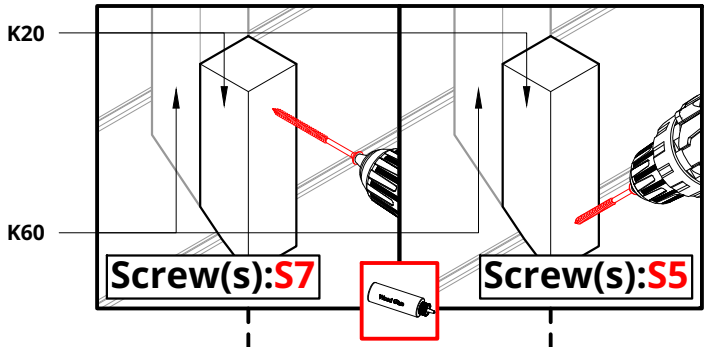

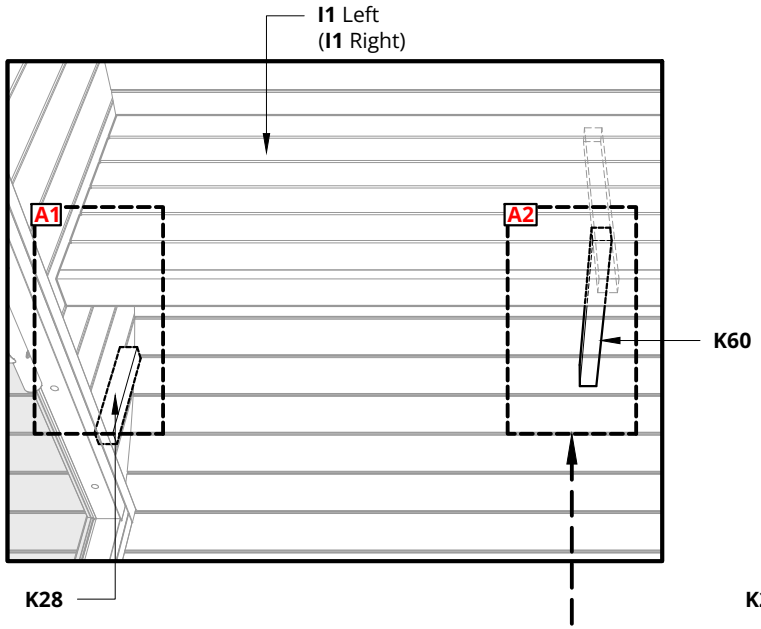

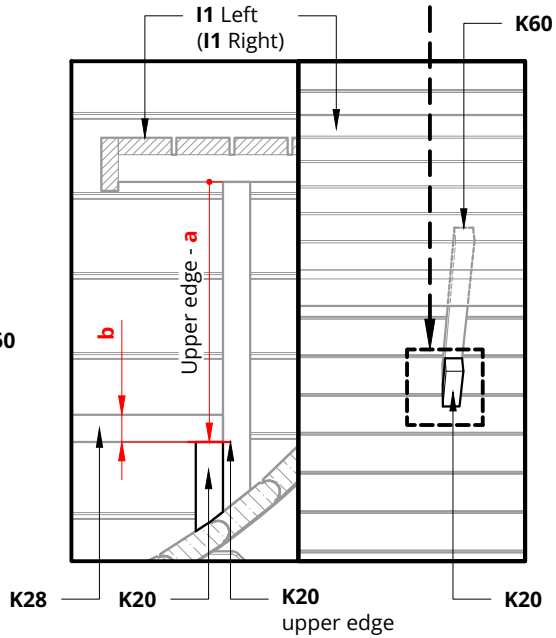

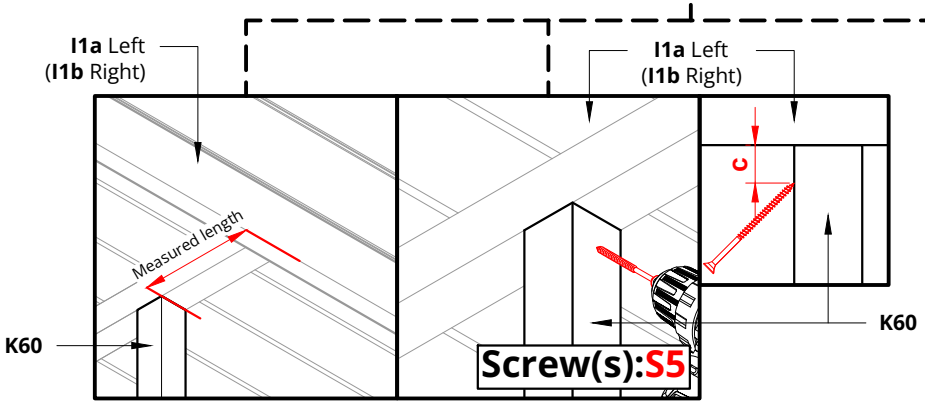

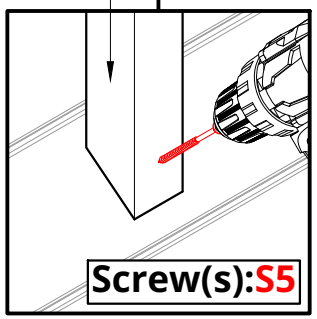

Notice!

Drill 4mm hole in the K... square woods before screwing.

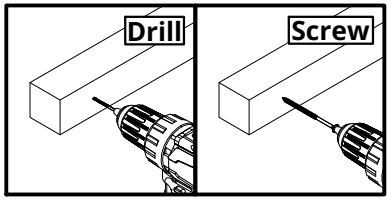

Use glue!

Screw(s)*	Name:	Quantity:
	S7	6
	S5	8

*Screw dimensions - Bench assembly detail list

NB! use a level

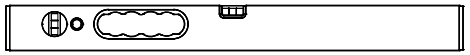

Please countersink the screw head(s)!
The square wood K20 and K28 are longer and must be cut to the correct size!

Install the Lower bench!
Install some supports to keep the bench level!
First install the outer leg(s) K28 of the bench!
Install the middle leg K20 of the bench!

Repeat these steps on the other side as well!

Dimensions and measurements		
a	~25 mm	~ 0'-1"

Lower bench **I2a** Left

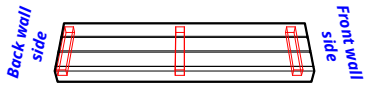

Lower bench **I2b** Right

Pay attention!

Notice!

Drill 4mm hole in the K... square woods before screwing.

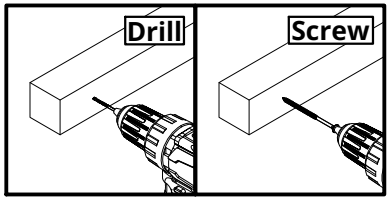

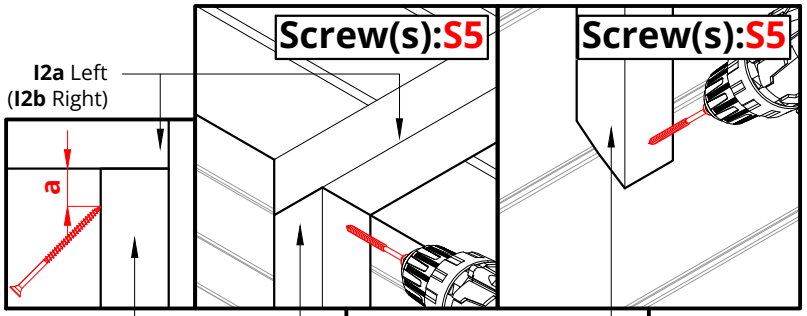

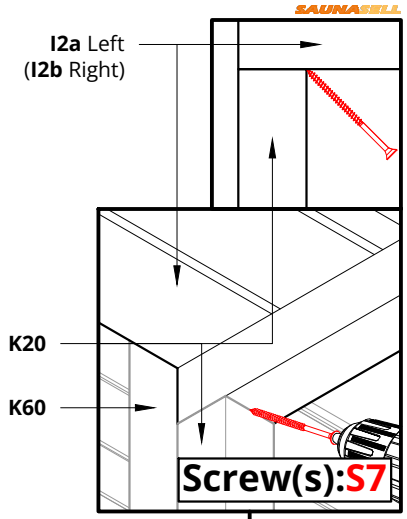

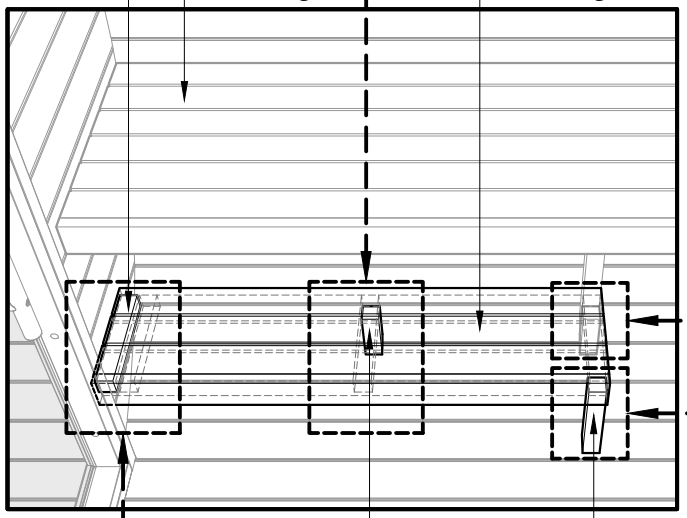

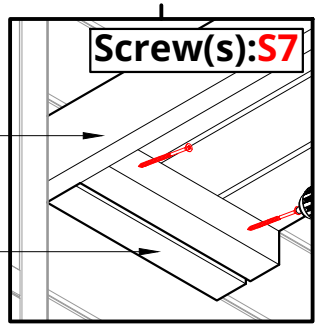

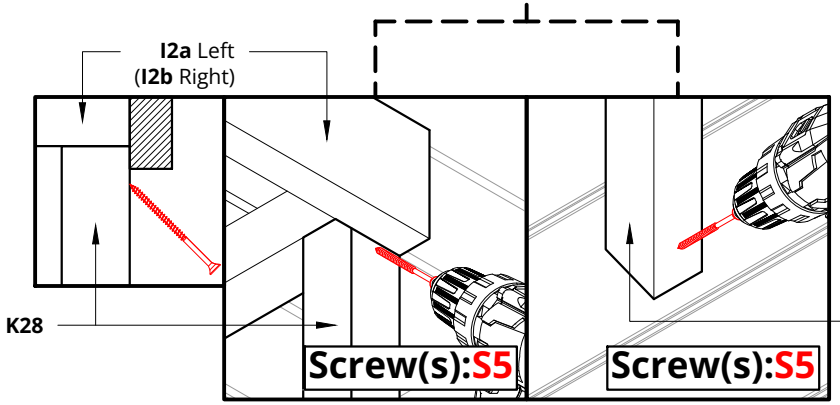

Lerra SAUNA SERIES

Screw(s)*	Name:	Quantity:
	S7	10

*Screw dimensions - Bench assembly detail list

NB! use a level

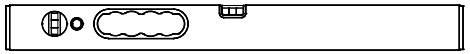

Please countersink the screw head(s)!
Use glue between the square wood K... and the wall!

Take the measurement from the top bench leg K60!
Install square woods for the bench skirt(s) by following the instructions in the pictures!

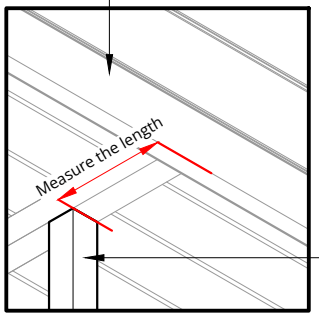

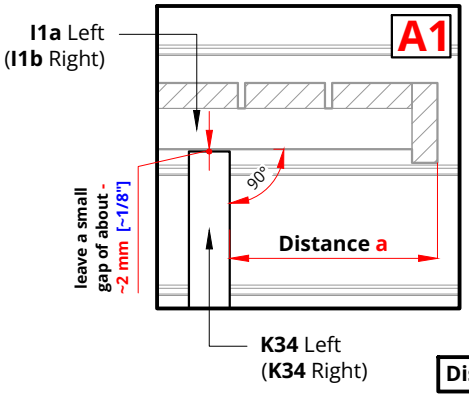

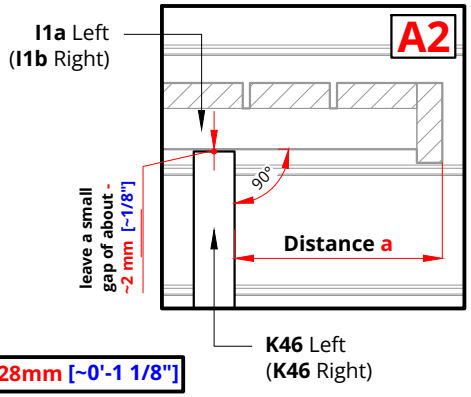

Distance a = Measure + 28mm [~0'-1 1/8"]

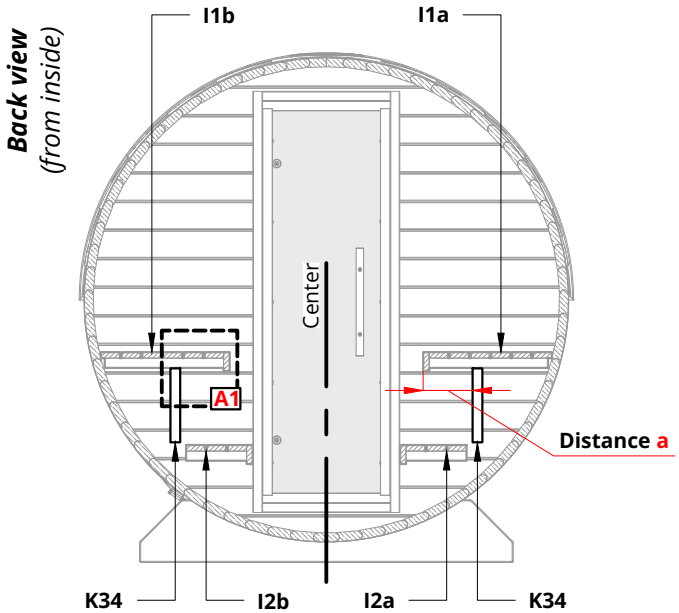

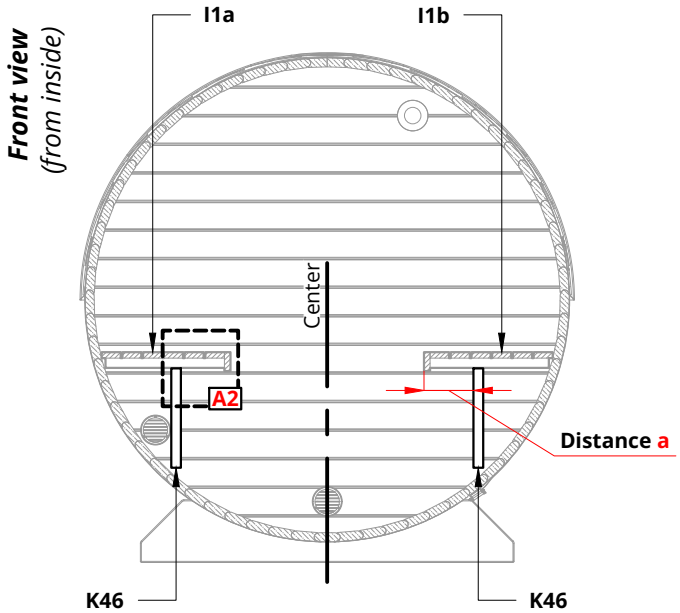

Notice!

Drill 4mm hole in the K... square woods before screwing.

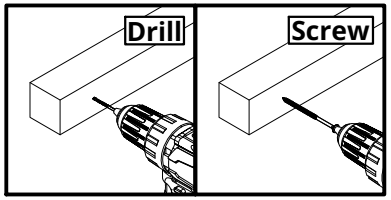

Use glue!

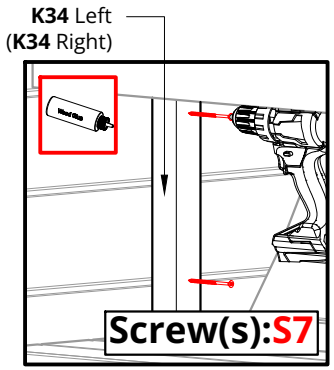

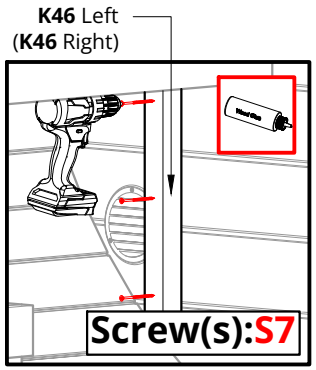

Screw(s)*	Name:	Quantity:
	S5	12

*Screw dimensions - Bench assembly detail list

Please countersink the screw head(s)!

Install the bench skirt(s)!
Repeat these steps on the other side as well!

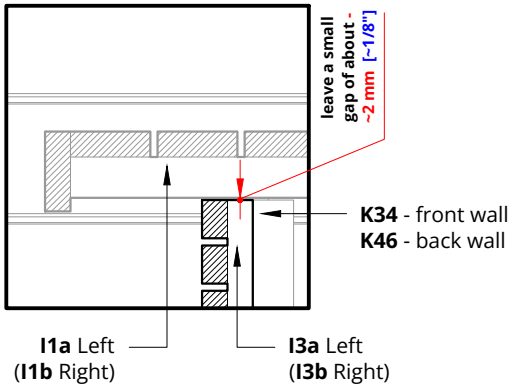

Bench skirt **I3a** Right

Bench skirt **I3b** Right

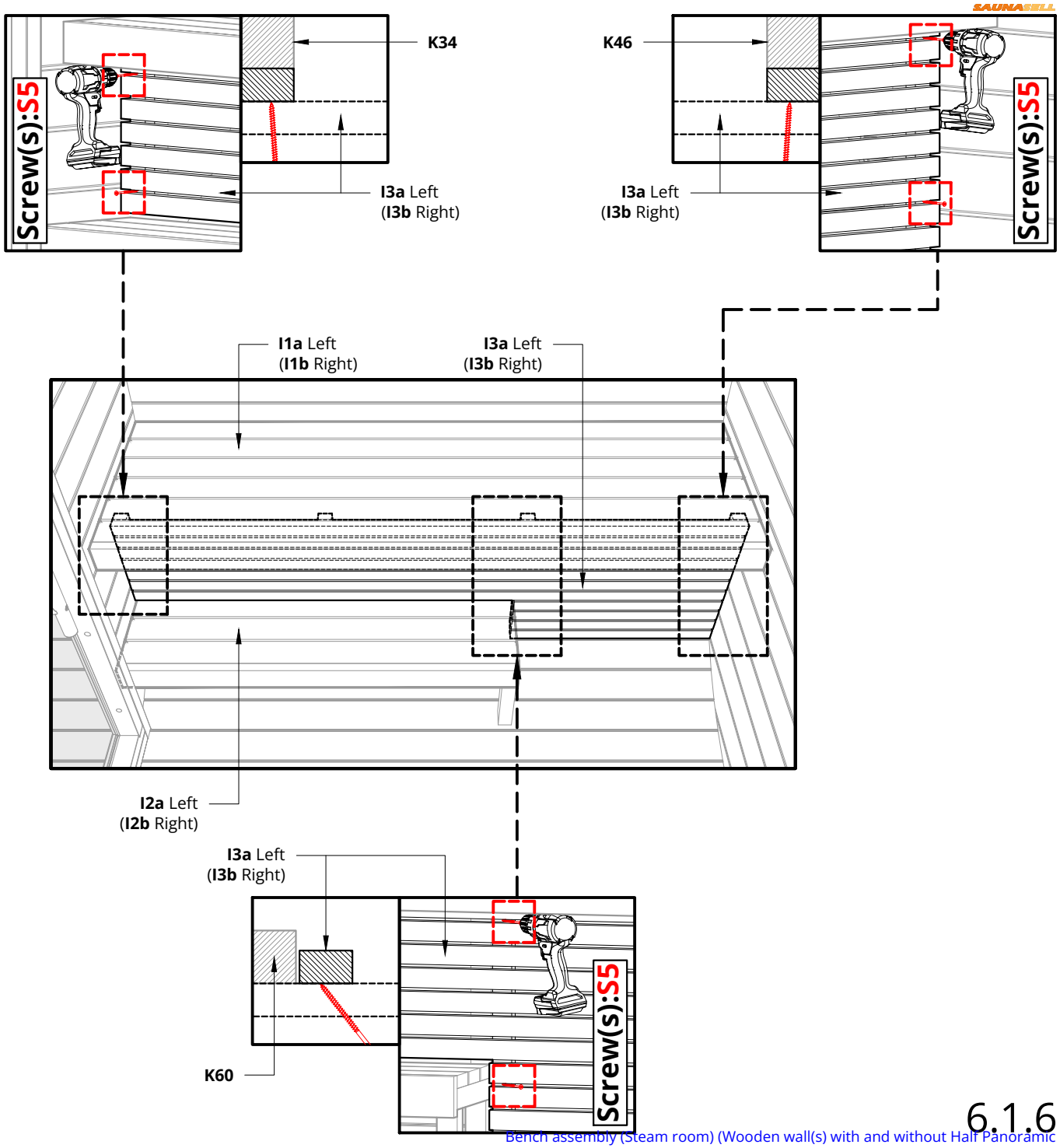

Lerra SAUNA SERIES

Screw(s)*	Name:	Quantity:
	S7	12

*Screw dimensions - Bench assembly detail list

NB! use a level

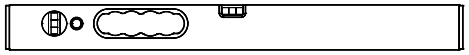

Please countersink the screw head(s)!
Measured from the center board of the floor!
Use glue between the square wood K... and the wall!

Install square woods for benches!

Dimensions and measurements		
a	808 mm	~ 2'-7 13/16"
Distance - b	~1384 mm	~ 4'-6 1/2"

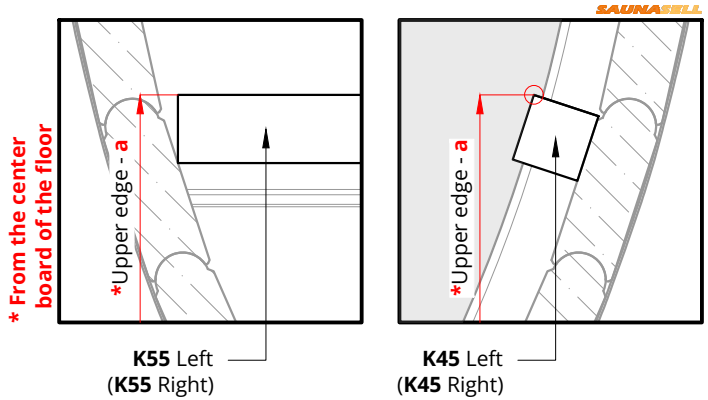

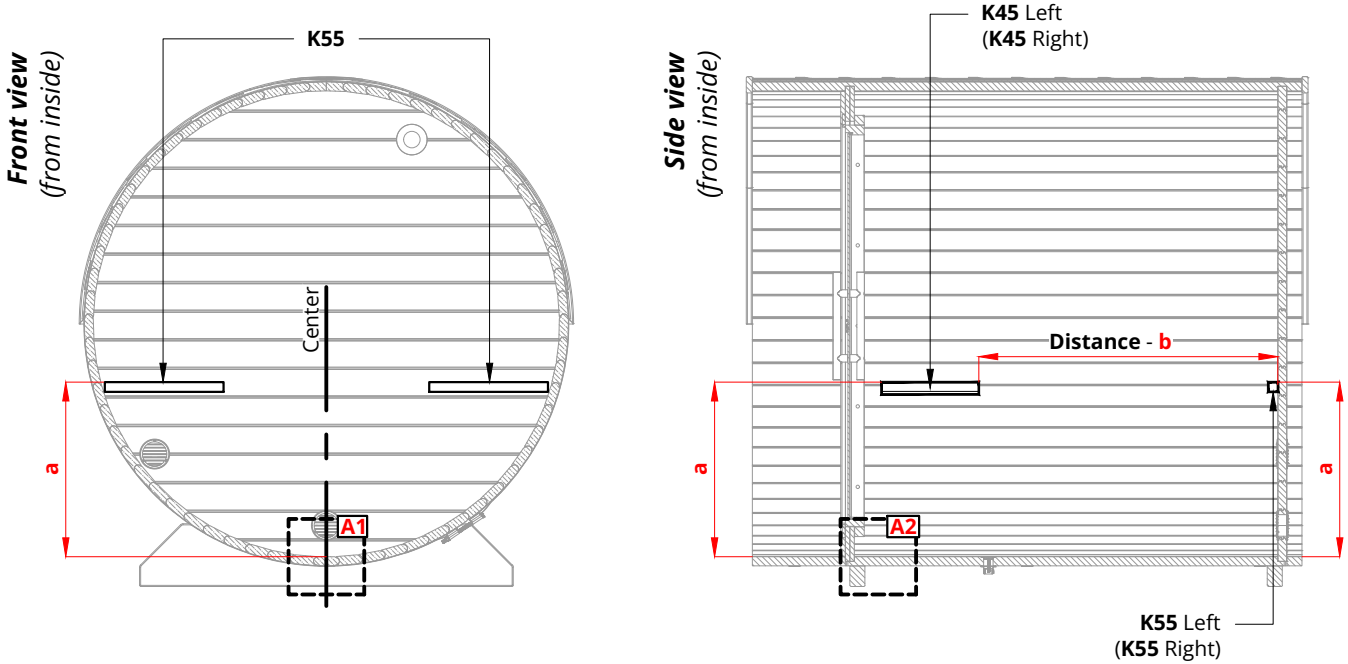

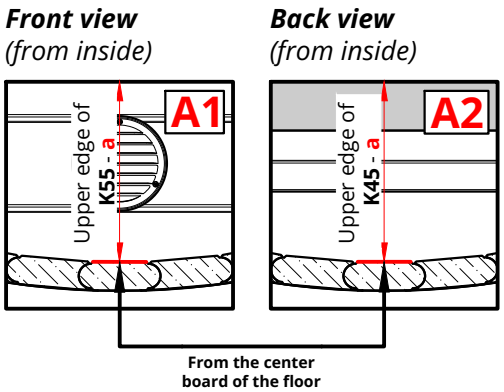

Notice!

Drill 4mm hole in the K... square woods before screwing.

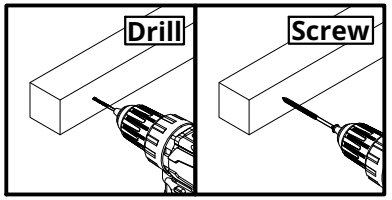

Use glue!

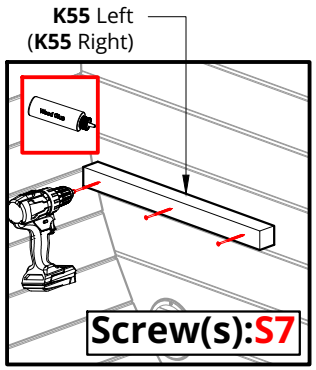

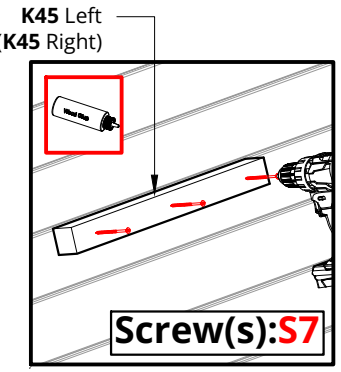

Lerra SAUNA SERIES

Screw(s)*	Name:	Quantity:
	S7	12
	S5	8

*Screw dimensions - Bench assembly detail list

NB! use a level

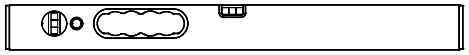

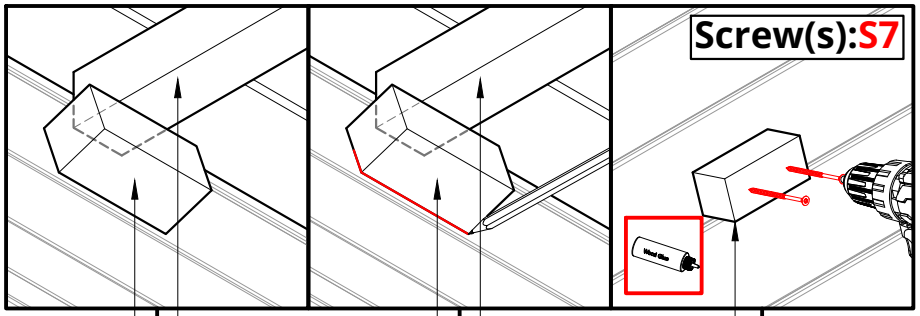

Please countersink the screw head(s)!
Use glue between the square wood K... and the wall!

Install the upper bench, screw only to K55 square wood and add support(s) to keep the bench level!
Place the square wood K10 it under the bench as shown in the picture and mark the location!
Unscrew the bench from the K55 and move the bench aside to install K10 where it was marked!
Put the bench back and fasten it to K55 and K45!

Repeat these steps on the other side as well!

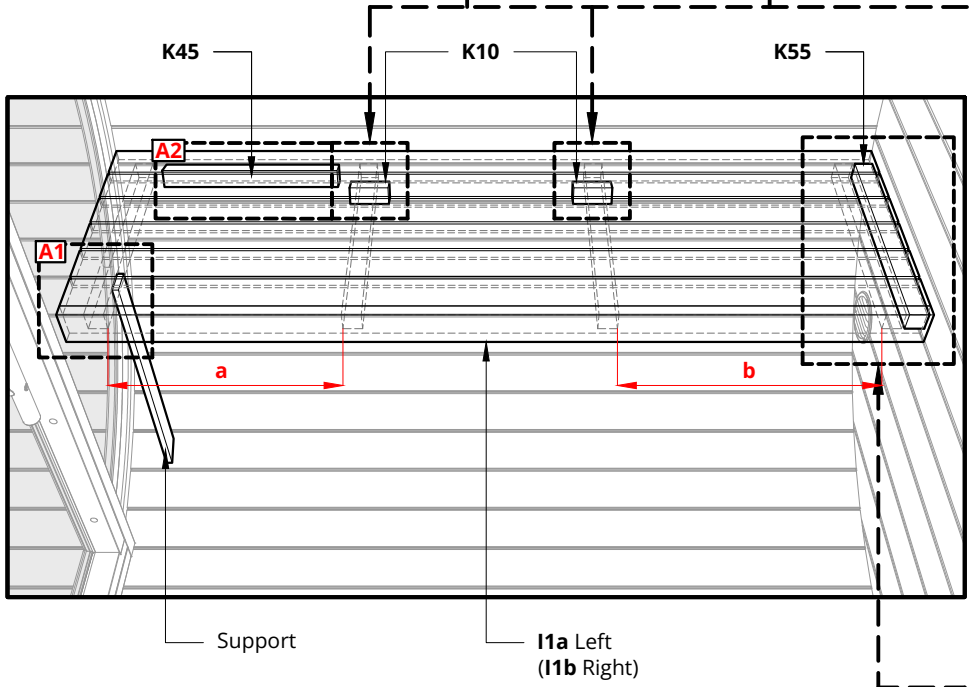

Dimensions and measurements		
a	537 mm	~ 1'-9 1/8"
b	604 mm	~ 1'-11 3/4"

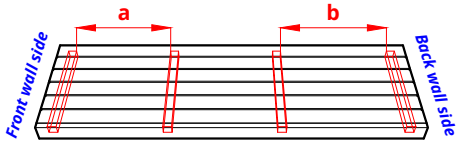

Upper bench **I1a** Left

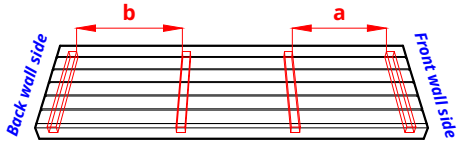

Upper bench **I1b** Right

Pay attention!

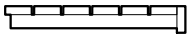

Notice!

Drill 4mm hole in the K... square woods before screwing.

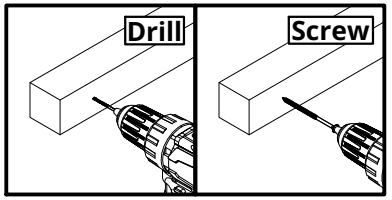

Use glue!

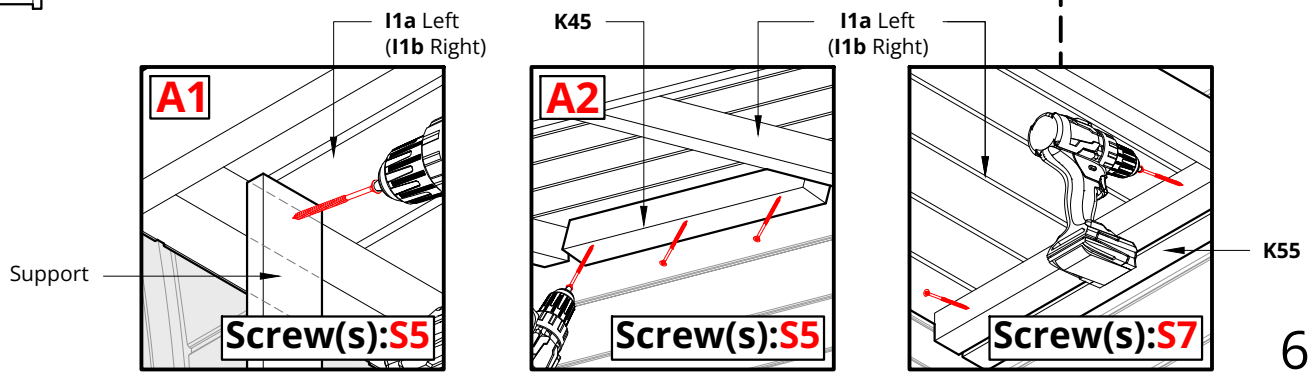

Lerra SAUNA SERIES

Screw(s)*	Name:	Quantity:
	S5	8

*Screw dimensions - Bench assembly detail list

NB! use a level

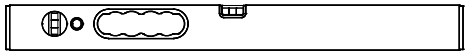

Please countersink the screw head(s)! The square wood K60 are longer and must be cut to the correct size!

Measure the position of the upper bench leg K60!
Mark the position of the bench leg(s) K60!
Measure the length of the bench leg(s) K60 from the marked position downwards!
Cut bench leg to the correct size!
Remove supports and install bench leg(s) K60!

Repeat these steps on the other side as well!

Dimensions and measurements		
c	~25 mm	~ 0'-1"

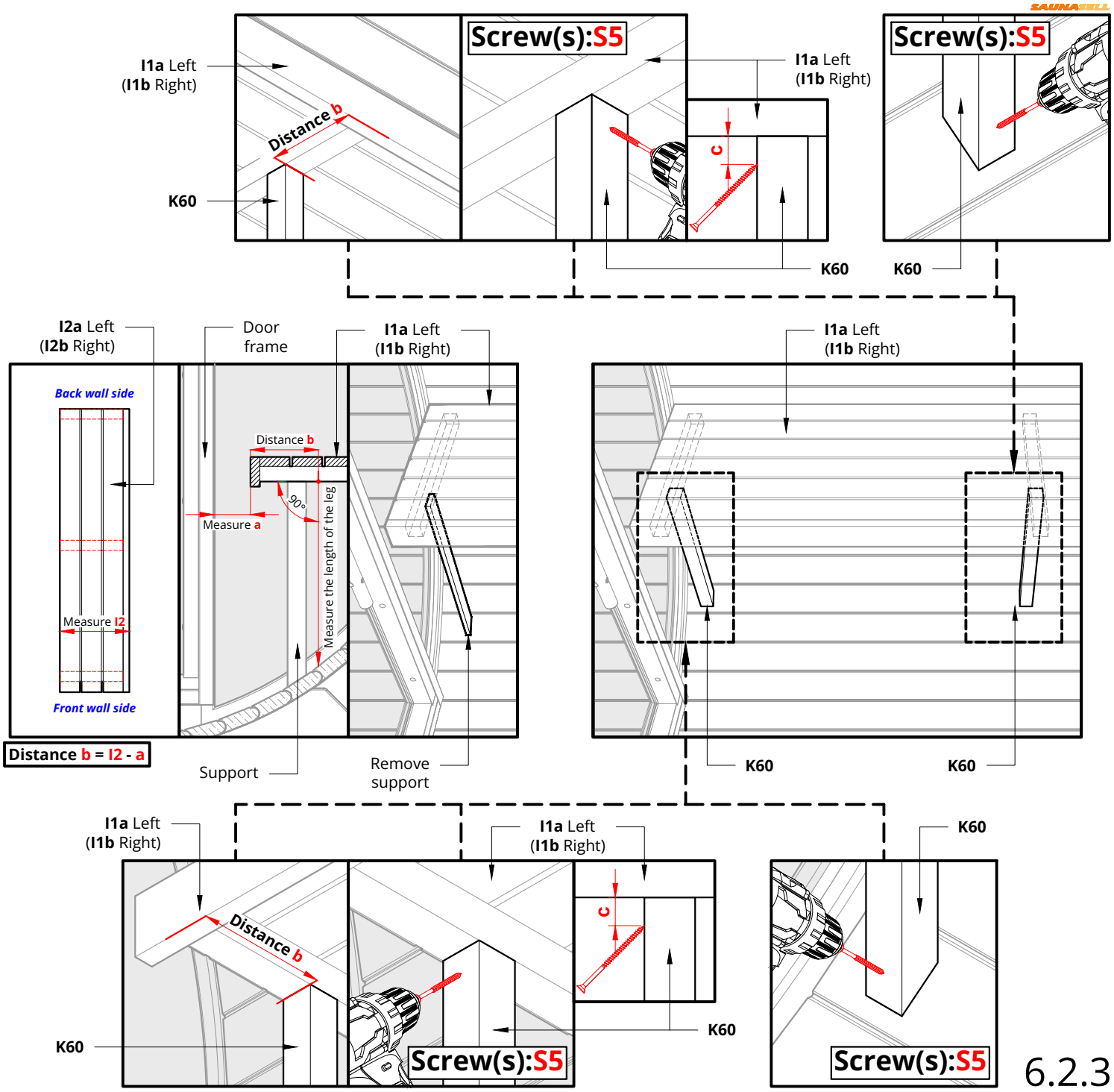

Notice!

Drill 4mm hole in the K... square woods before screwing.

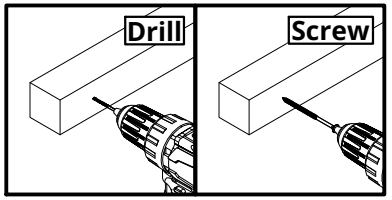

Lerra SAUNA SERIES

Screw(s)*	Name:	Quantity:
	S7	4
	S5	4

*Screw dimensions - Bench assembly detail list

Please countersink the screw head(s)!
Use glue between the square wood(s) K...!
The square wood K20 are longer and must be cut to the correct size!

Measure the height of lower bench leg K20!
Cut bench leg to the correct size and install it!

Repeat these steps on the other side as well!

Dimensions and measurements		
a	430 mm	~ 1'-4 15/16"

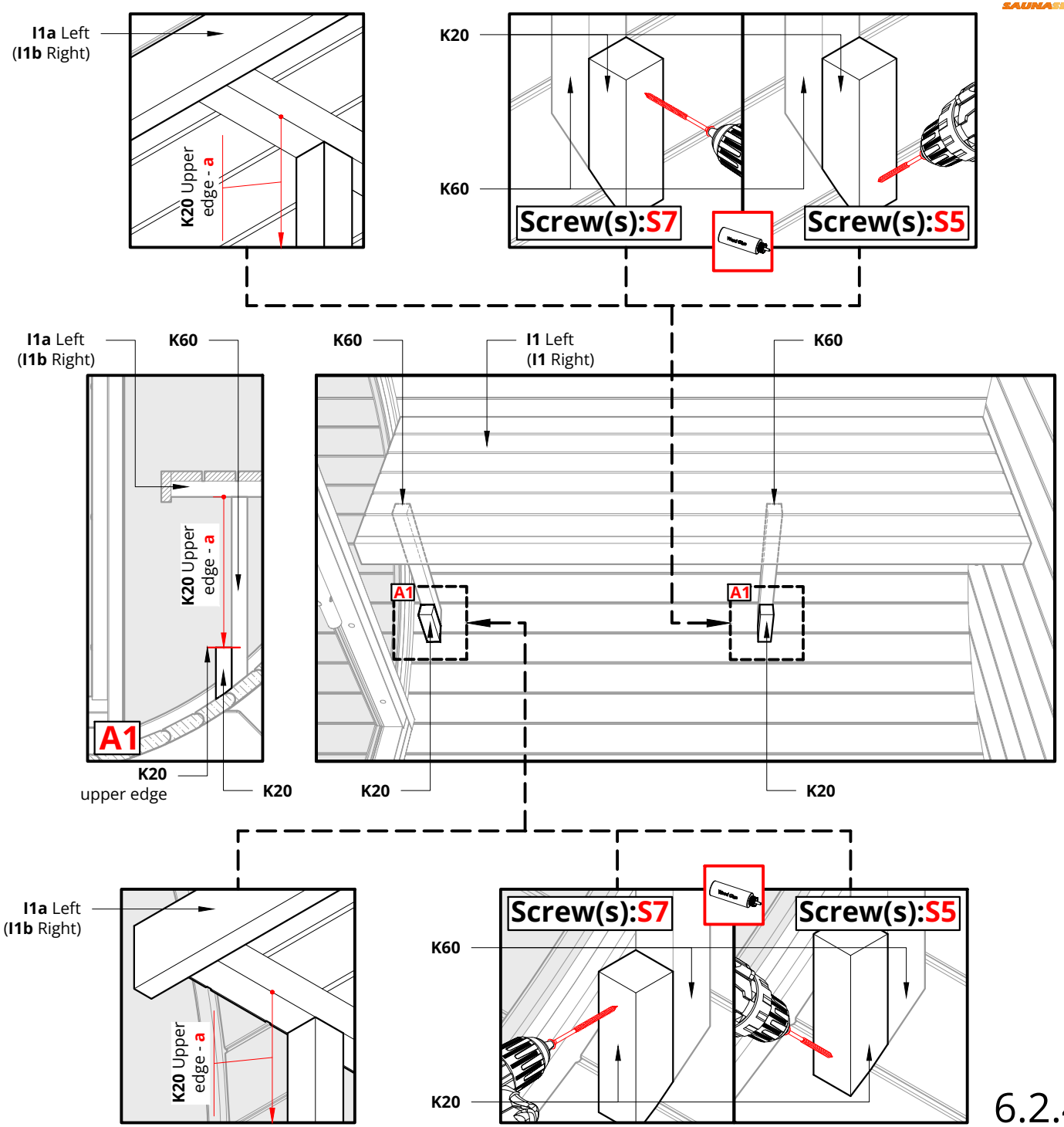

Notice!

Drill 4mm hole in the K... square woods before screwing.

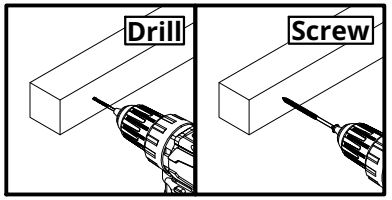

Use glue!

Lerra SAUNA SERIES

6.2.4

Bench assembly (Steam room) (Front Glass wall with and without Half Panoramic wall)

Screw(s)*	Name:	Quantity:
	S7	4
	S5	14

*Screw dimensions - Bench assembly detail list

NB! use a level

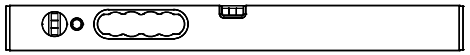

Please countersink the screw head(s)!
The square wood K20 and K28 are longer and must be cut to the correct size!

Install the Lower bench!
Install some supports to keep the bench level!
First install the outer leg(s) K28 of the bench!
Install the middle leg K20 of the bench!
Remove supports!

Repeat these steps on the other side as well!

Dimensions and measurements		
a	~25 mm	~ 0'-1"

Lower bench **I2a** Left

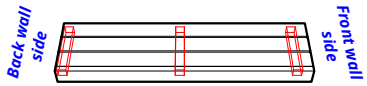

Lower bench **I2b** Right

Pay attention!

Notice!

Drill 4mm hole in the K... square woods before screwing.

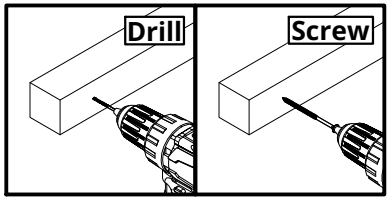

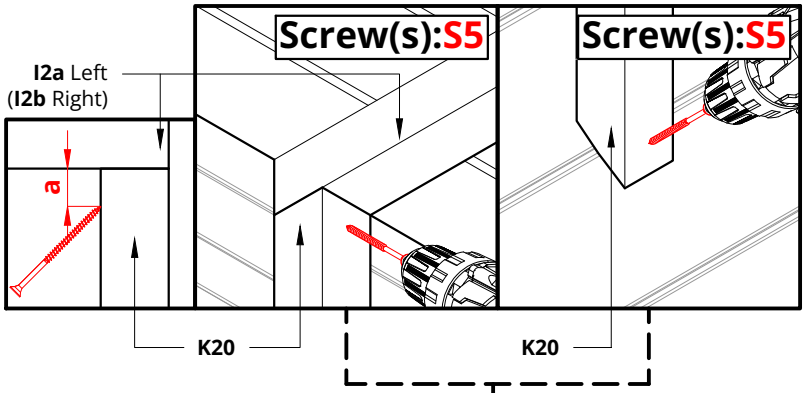

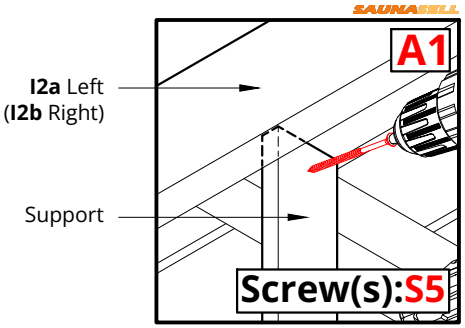

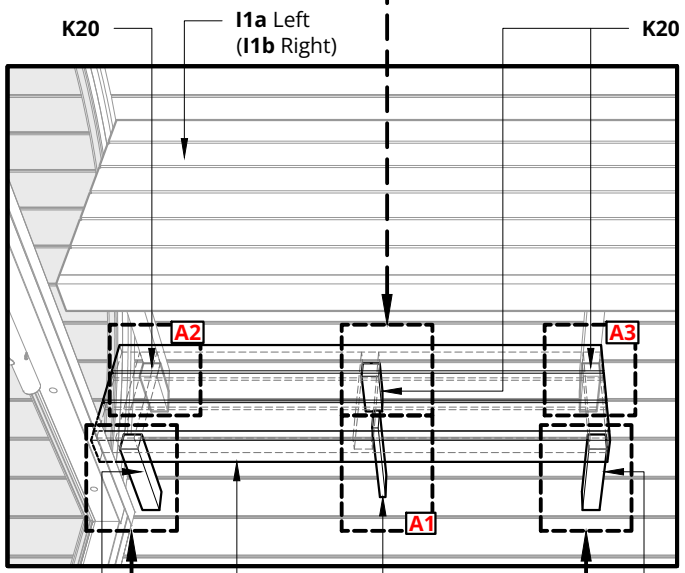

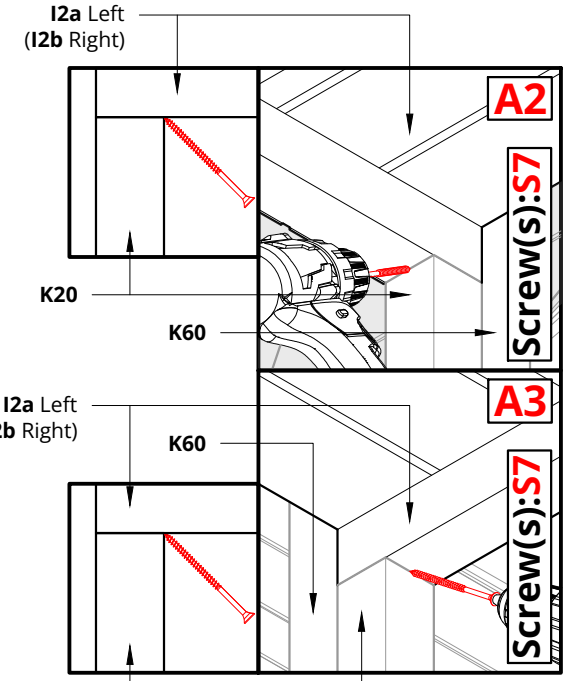

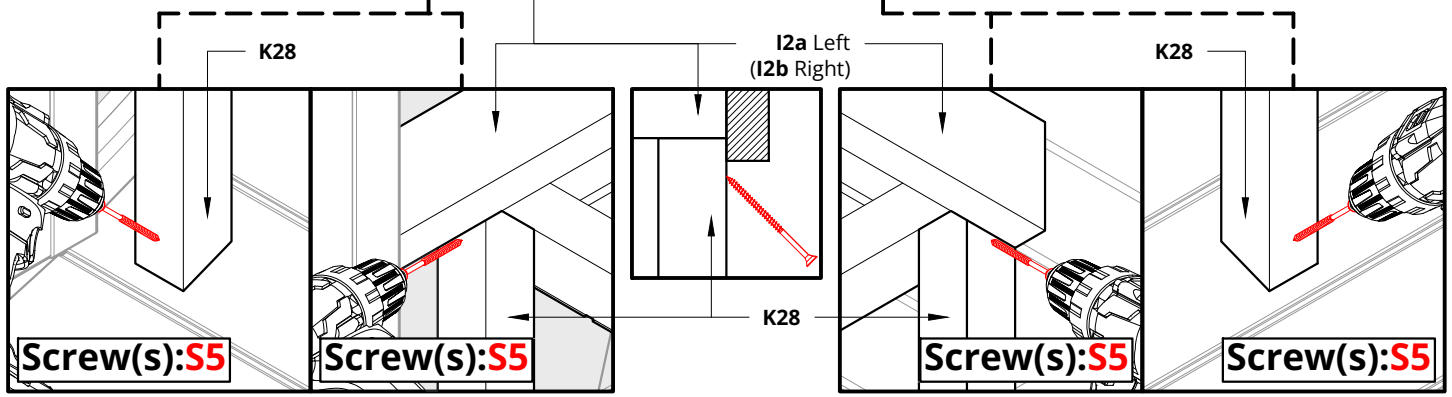

Lerra SAUNA SERIES

6.2.5

Bench assembly (Steam room) (Front Glass wall with and without Half Panoramic wall)

Screw(s)*	Name:	Quantity:
	S7	6
	S5	4

*Screw dimensions - Bench assembly detail list

NB! use a level

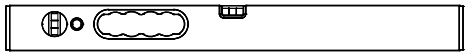

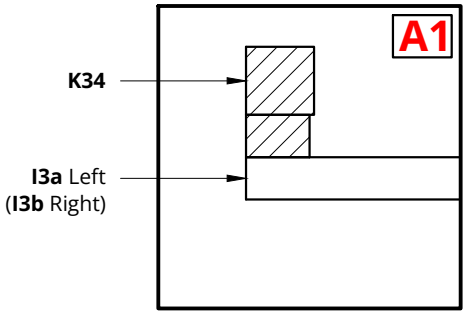

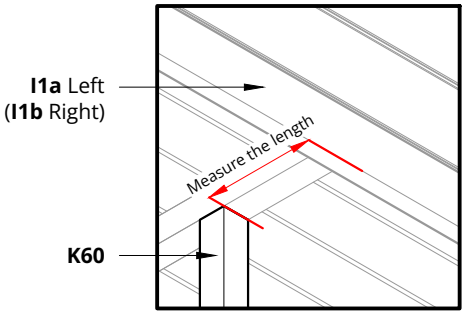

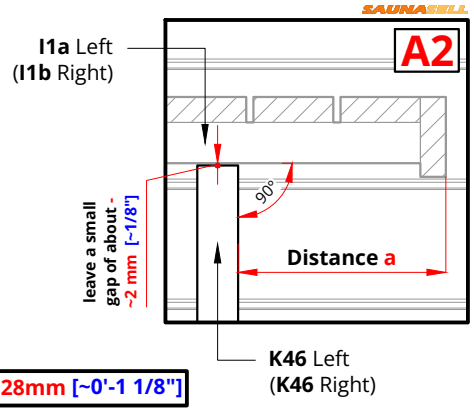

Distance a = Measure + 28mm [~0'-1 1/8"]

Please countersink the screw head(s)!
Use glue between the square wood K... and the wall!

Install square wood(s) K34 to the bench skirt(s)!
Take the measurement from the top bench leg K60 and add ~28mm [~0'-1 1/8"]!
Install square wood(s) K46 to the Back wall by following the instructions in the pictures!

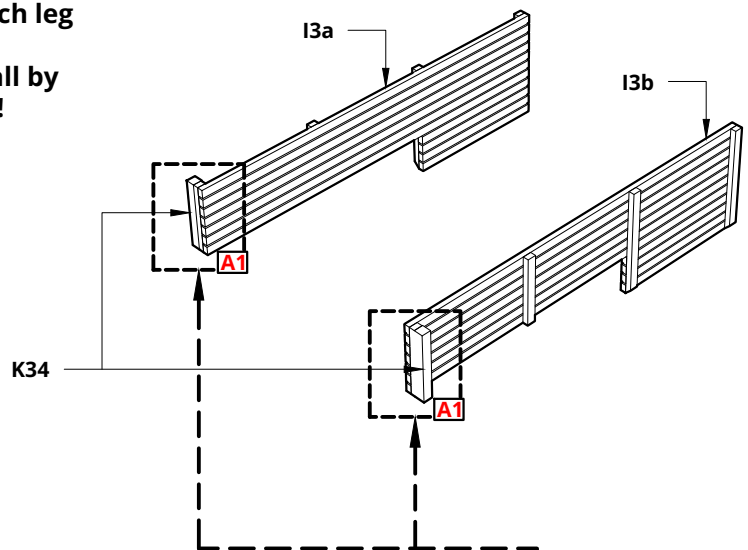

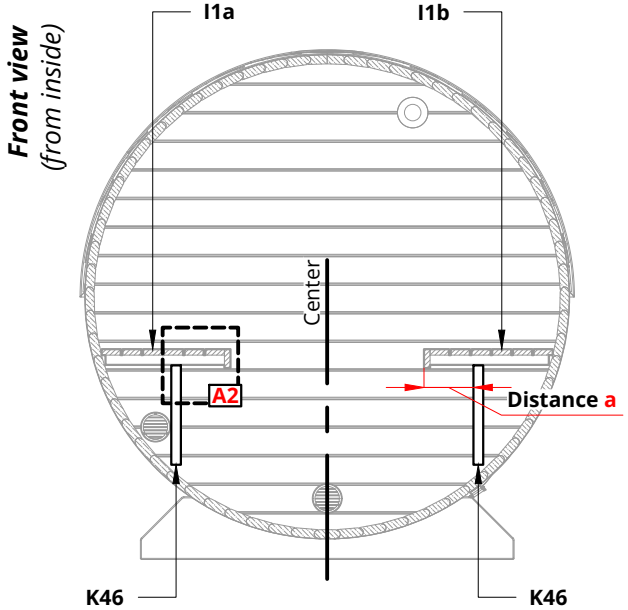

Notice!

Drill 4mm hole in the K... square woods before screwing.

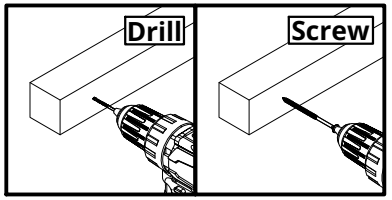

Use glue!

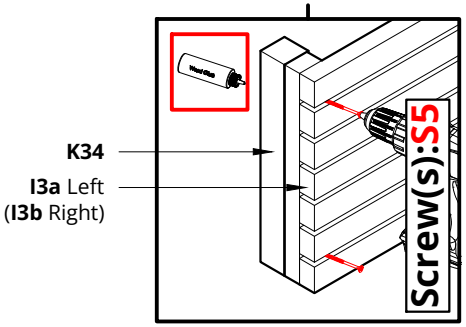

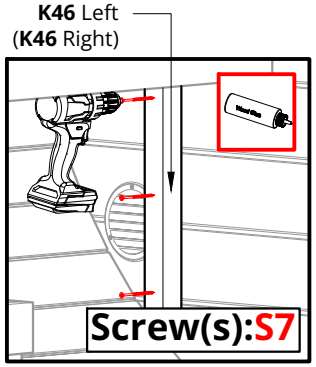

Lerra SAUNA SERIES

Screw(s)*	Name:	Quantity:
	S5	12

*Screw dimensions - Bench assembly detail list

Please countersink the screw head(s)!

Install the bench skirt(s)!
Repeat these steps on the other side as well!

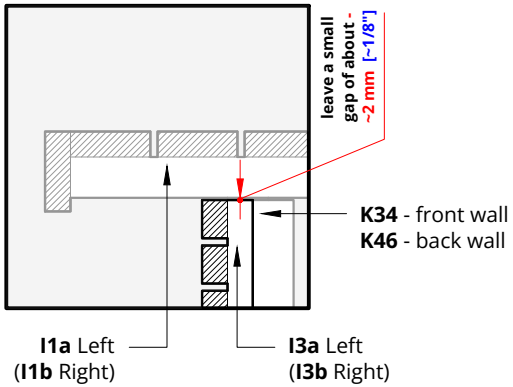

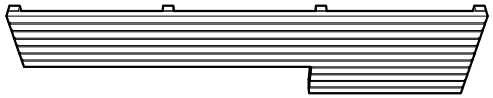

Bench skirt **I3a** Right

Bench skirt **I3b** Right

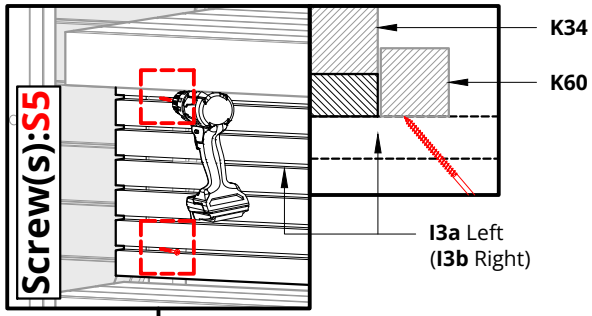

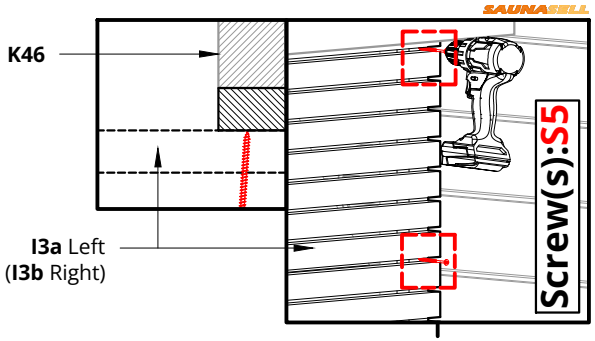

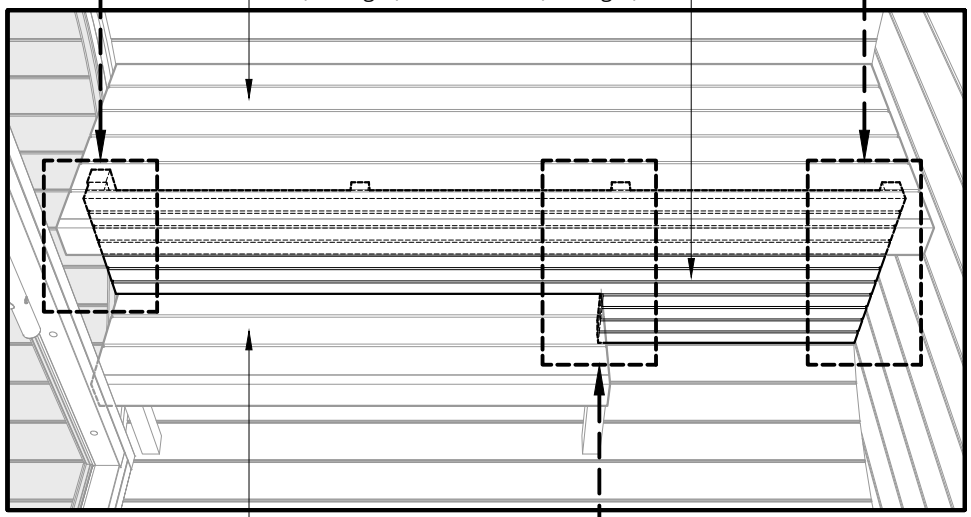

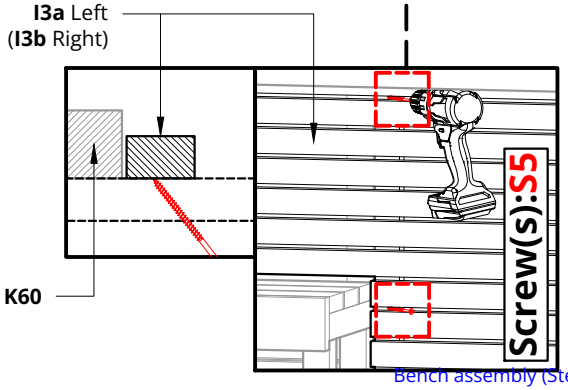

Lerra SAUNA SERIES

Screw(s)*	Name:	Quantity:
	S7	16

*Screw dimensions - Bench assembly detail list

NB! use a level

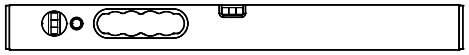

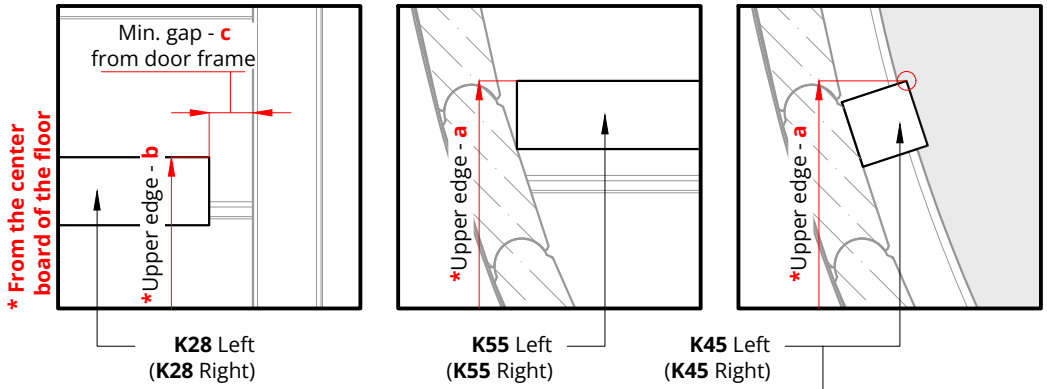

Please countersink the screw head(s)!
Measured from the center board of the floor!
Use glue between the square wood K... and the wall!

Install square woods for benches!

Dimensions and measurements		
a	808 mm	~ 2'-7 13/16"
b	378 mm	~ 1'-2 7/8"
c	29 mm	~ 0'-1 1/8"
d	~112 mm	~ 0'-4 3/8"
Distance - b	~126 mm	~ 0'-4 15/16"

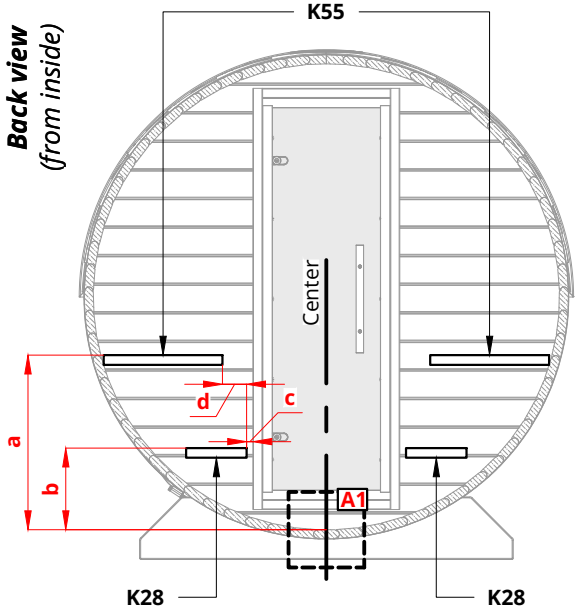

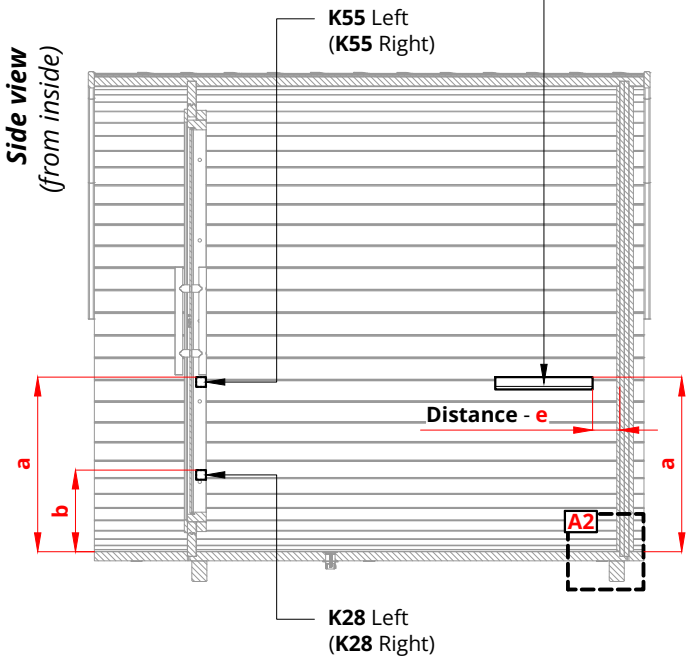

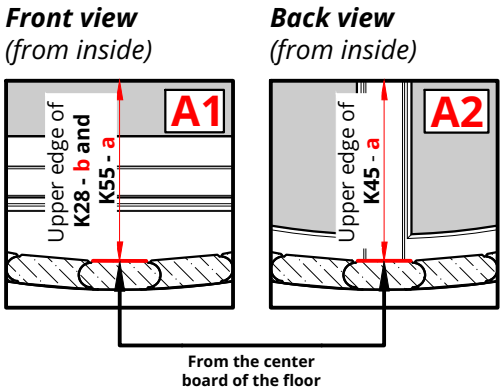

Notice!
Drill 4mm hole in the K... square woods before screwing.

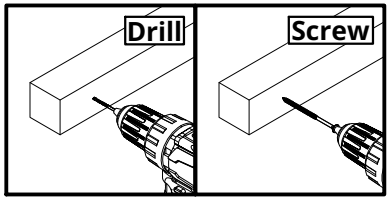

Use glue!

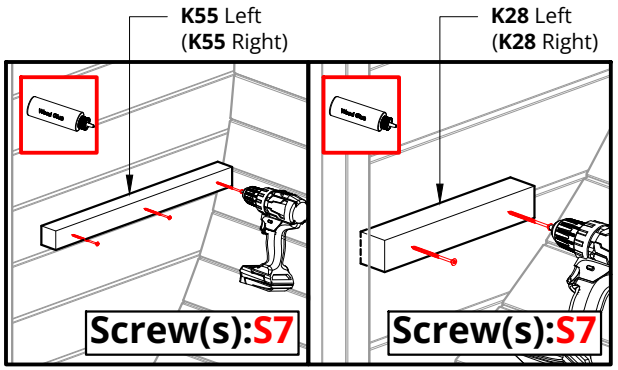

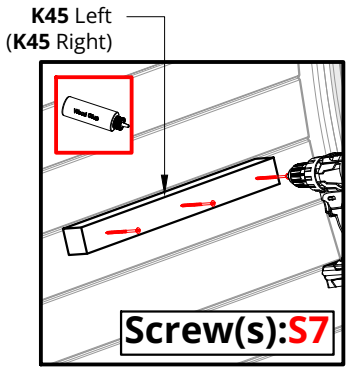

Lerra SAUNA SERIES

Screw(s)*	Name:	Quantity:
	S7	12
	S5	8

*Screw dimensions - Bench assembly detail list

NB! use a level

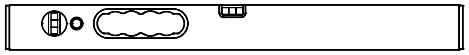

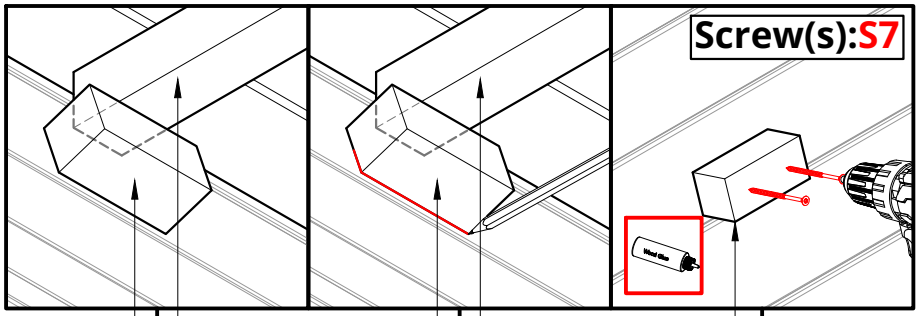

Please countersink the screw head(s)!
Use glue between the square wood K... and the wall!

Install the upper bench, screw only to K55 square wood and add support(s) to keep the bench level!
Place the square wood K10 it under the bench as shown in the picture and mark the location!
Unscrew the bench from the K55 and move the bench aside to install K10 where it was marked!
Put the bench back and fasten it to K55 and K45!

Repeat these steps on the other side as well!

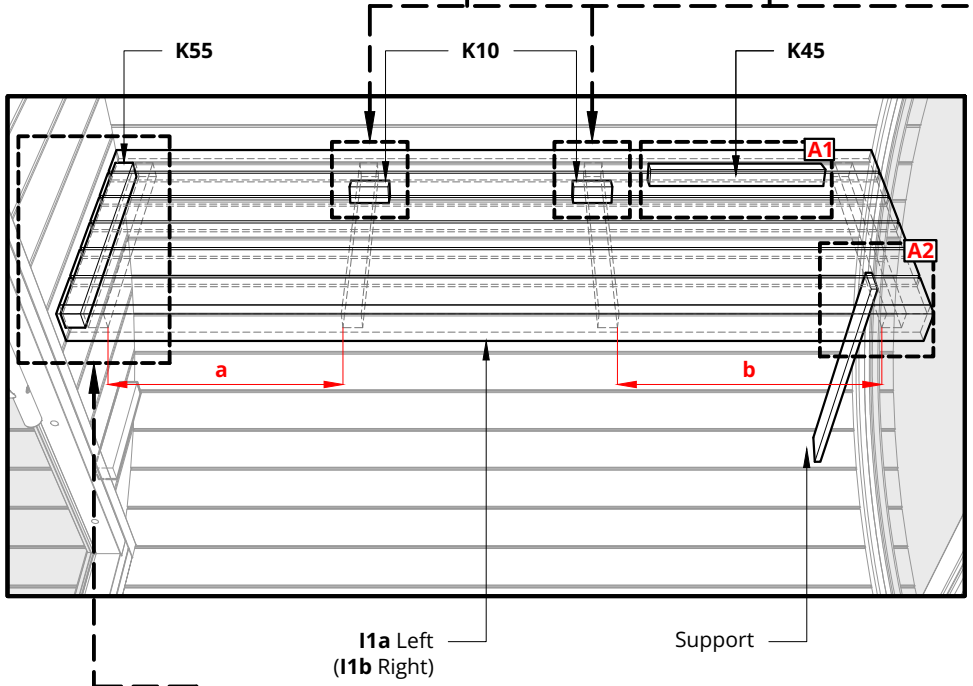

Dimensions and measurements		
a	537 mm	~ 1'-9 1/8"
b	604 mm	~ 1'-11 3/4"

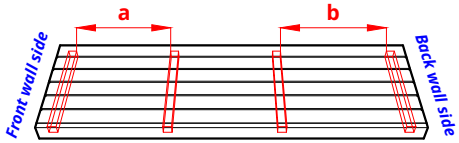

Upper bench **I1a** Left

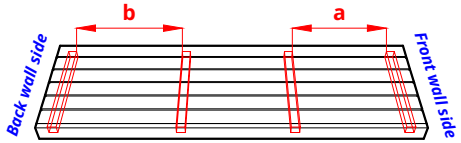

Upper bench **I1b** Right

Pay attention!

Notice!

Drill 4mm hole in the K... square woods before screwing.

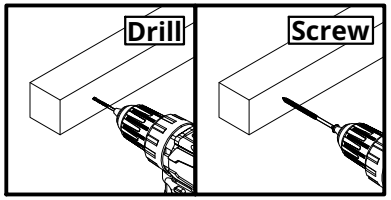

Use glue!

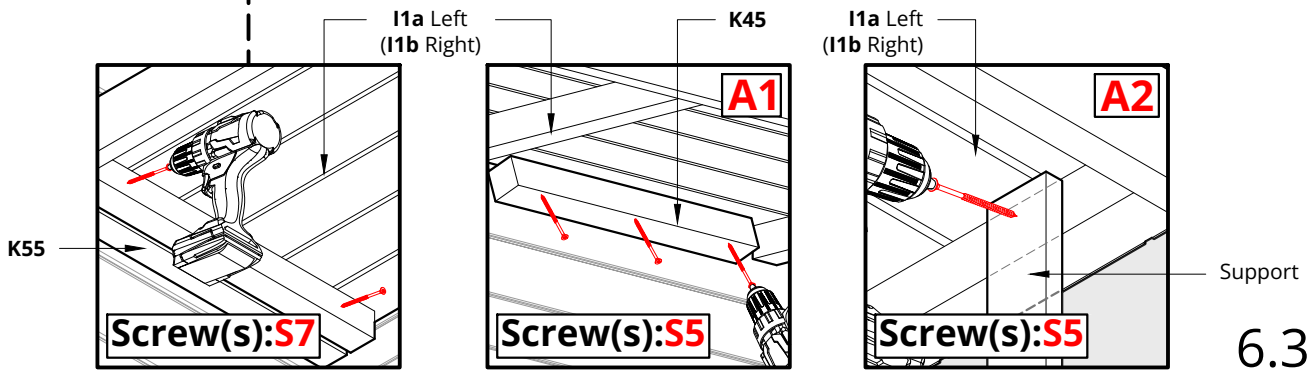

Lerra SAUNA SERIES

6.3.2

Screw(s)*	Name:	Quantity:
	S7	2
	S5	6

*Screw dimensions - Bench assembly detail list

NB! use a level

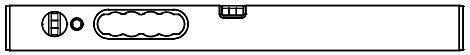

Please countersink the screw head(s)!
Use glue between the square wood(s) K...!
The square wood K20 and K60 are longer and must be cut to the correct size!

Measure the position of the upper bench leg K60!
Mark the position of the bench leg K60!
Measure the length of the bench leg K60 from the marked position downwards!
Cut bench leg to the correct size!
Install bench leg K60!
Measure the height of lower bench leg K20!
Cut bench leg to the correct size and install it!

Repeat these steps on the other side as well!

Dimensions and measurements		
a	430 mm	~ 1'-4 15/16"
b	45 mm	~ 0'-1 3/4"
c	~25 mm	~ 0'-1"

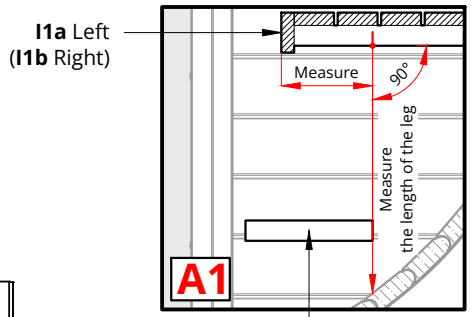

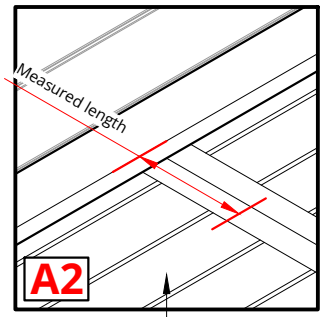

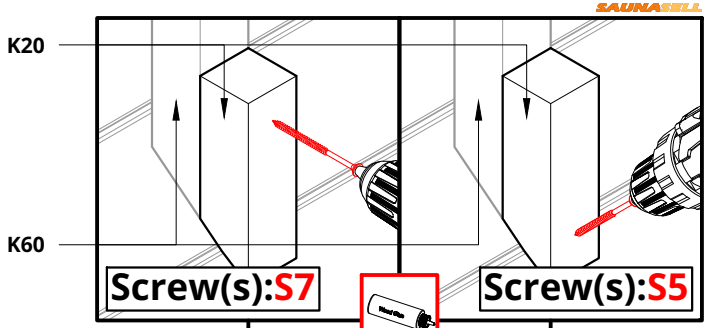

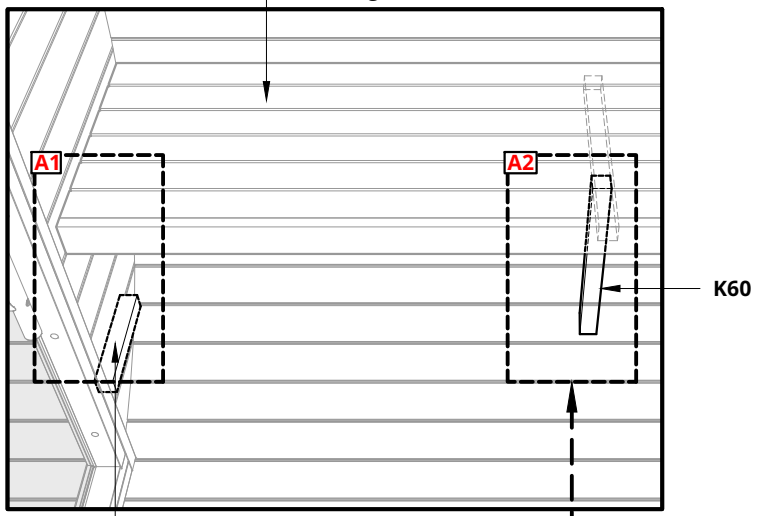

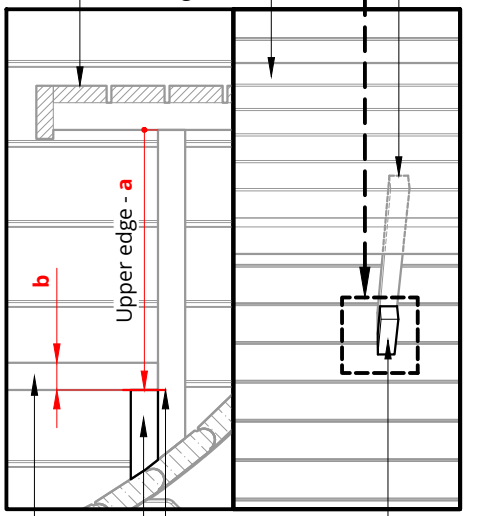

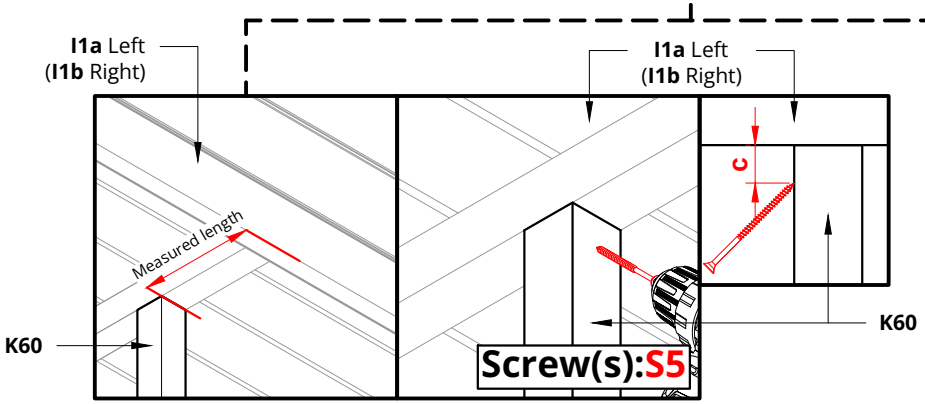

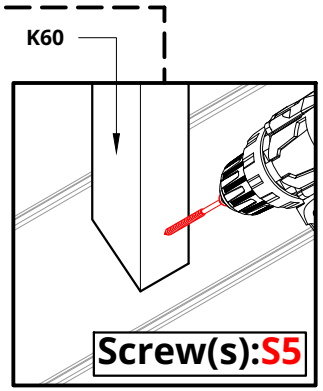

Notice!

Drill 4mm hole in the K... square woods before screwing.

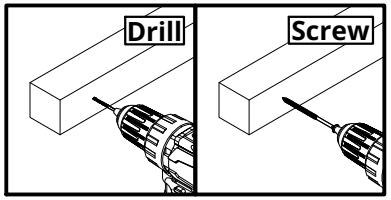

Use glue!

Lerra SAUNA SERIES

6.3.3

Screw(s)*	Name:	Quantity:
	S5	4

*Screw dimensions - Bench assembly detail list

NB! use a level

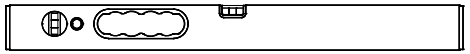

Please countersink the screw head(s)!
The square wood K60 are longer and must be cut to the correct size!

Measure the position of the upper bench leg K60!
Mark the position of the bench leg(s) K60!
Remove supports!
Measure the length of the bench leg(s) K60 from the marked position downwards!
Cut bench leg to the correct size and install bench leg(s) K60!

Repeat these steps on the other side as well!

Dimensions and **measurements**		
a	~25 mm	~ 0'-1"

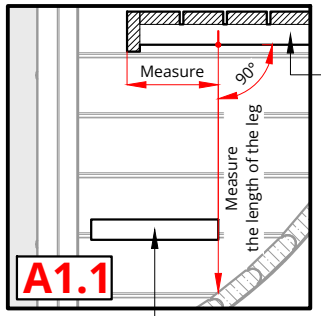

I1a Left
(I1b Right)

-Or-

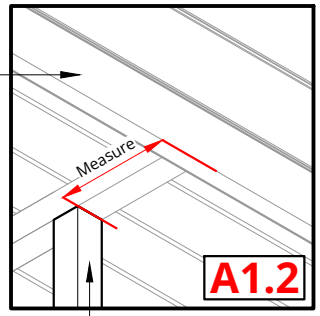

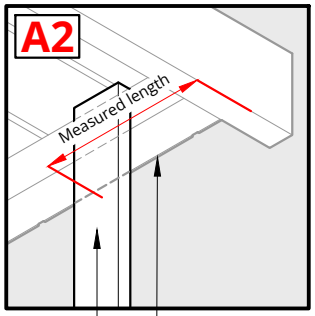

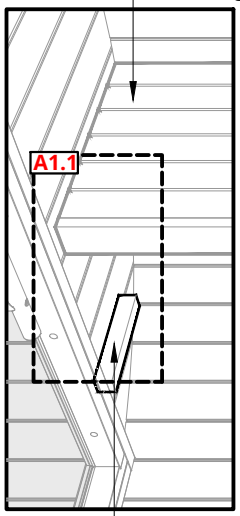

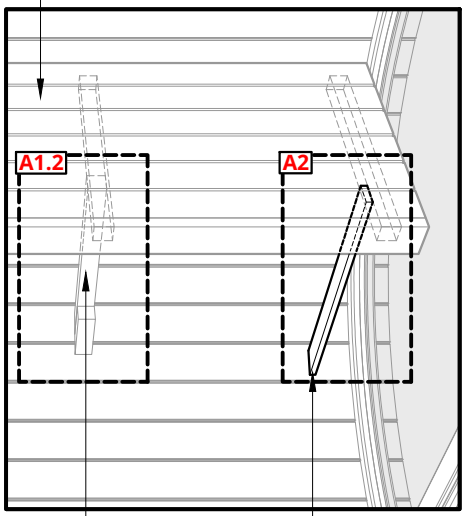

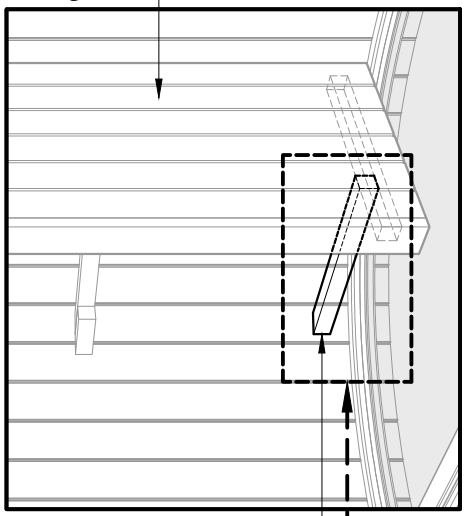

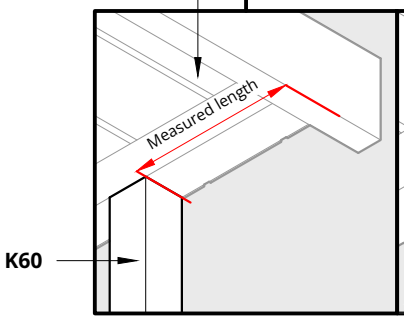

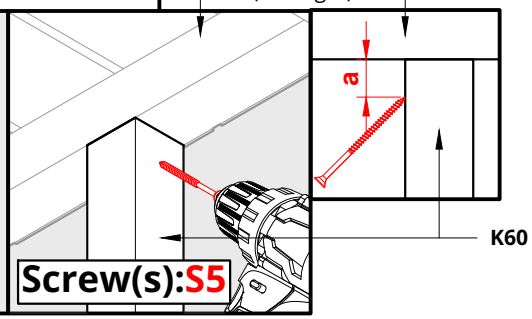

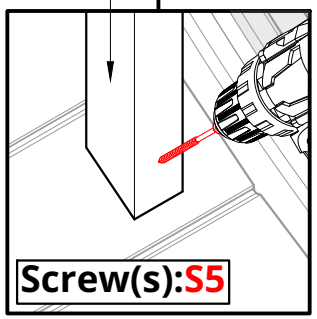

Notice!

Drill 4mm hole in the K... square woods before screwing.

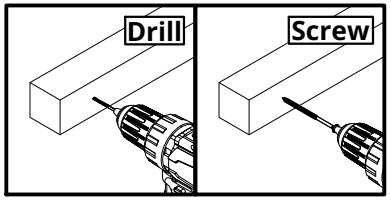

Lerra SAUNA SERIES

Screw(s)*	Name:	Quantity:
	S7	6
	S5	8

*Screw dimensions - Bench assembly detail list

NB! use a level

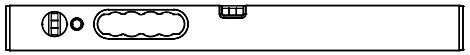

Please countersink the screw head(s)!
The square wood K20 and K28 are longer and must be cut to the correct size!

Install the Lower bench!
Install some supports to keep the bench level!
First install the outer leg(s) K28 of the bench!
Install the middle leg K20 of the bench!

Repeat these steps on the other side as well!

Dimensions and measurements		
a	~25 mm	~ 0'-1"

Lower bench **I2a** Left

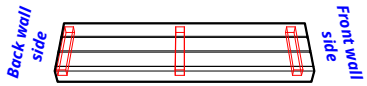

Lower bench **I2b** Right

Pay attention!

Notice!

Drill 4mm hole in the K... square woods before screwing.

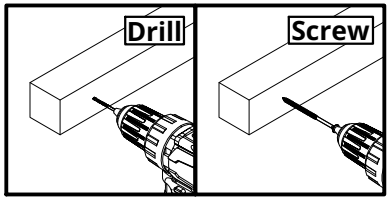

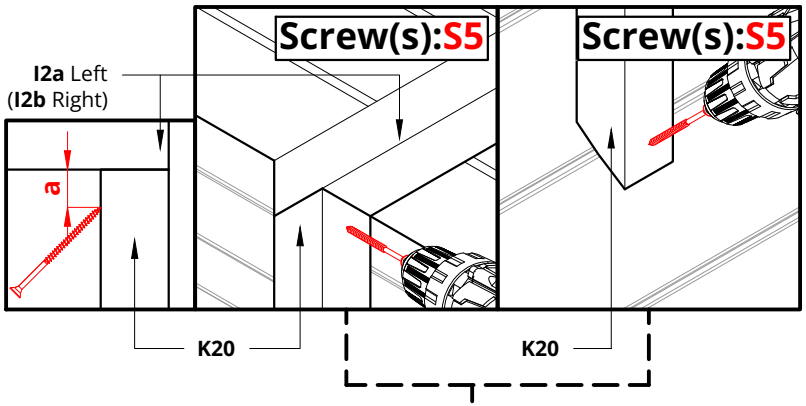

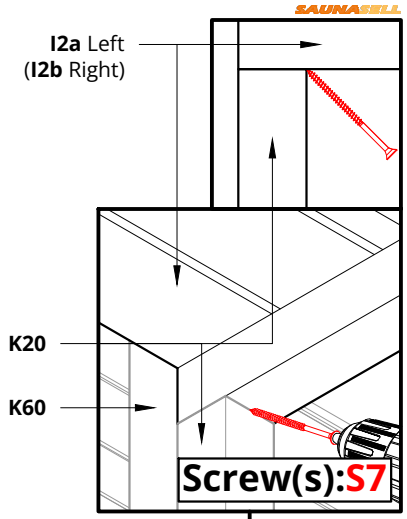

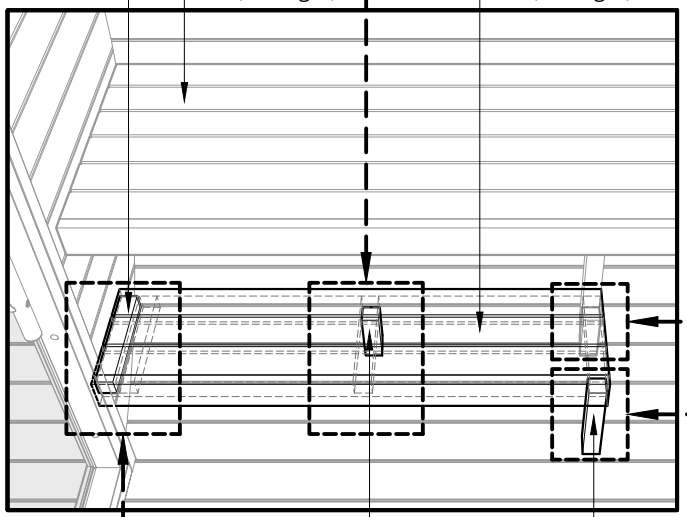

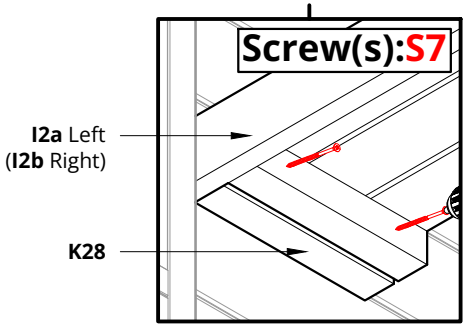

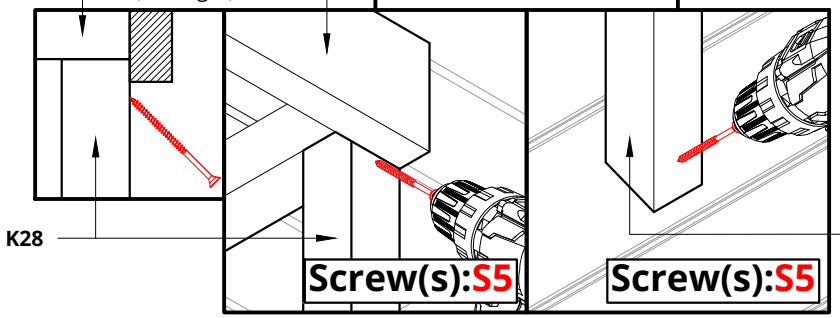

Screw(s)*	Name:	Quantity:
	S7	4
	S5	4

*Screw dimensions - Bench assembly detail list

NB! use a level

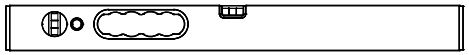

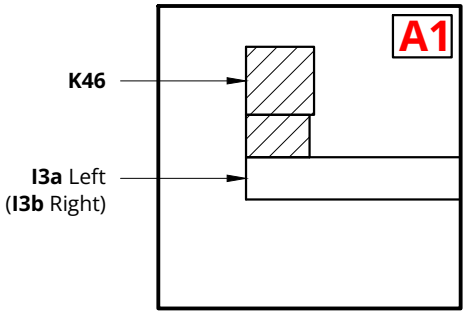

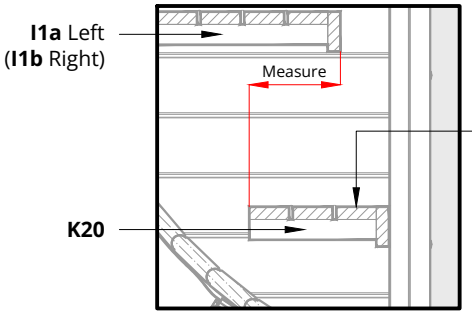

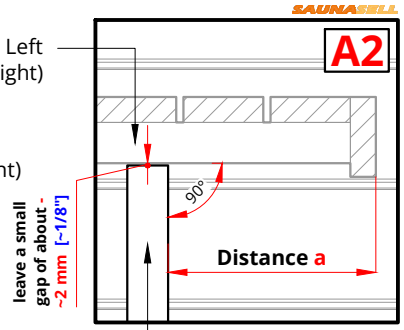

Distance a = Measure + 28mm [~0'-1 1/8"]

Please countersink the screw head(s)!
Use glue between the square wood K... and the wall!

Install square wood(s) K46 to the bench skirt(s)!
Take the measurement from the top bench and add ~28mm [~0'-1 1/8"]!
Install square wood(s) K34 to the Front wall by following the instructions in the pictures!

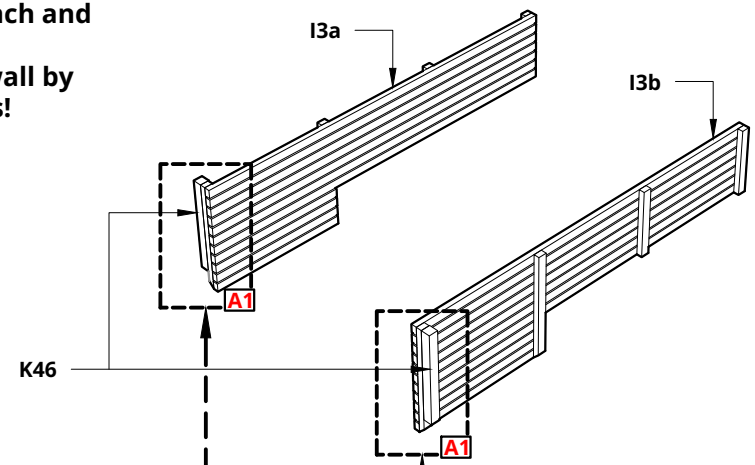

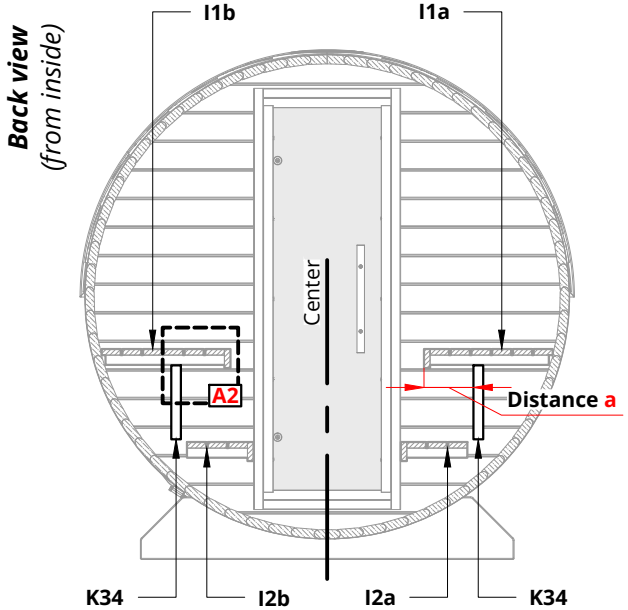

Notice!

Drill 4mm hole in the K... square woods before screwing.

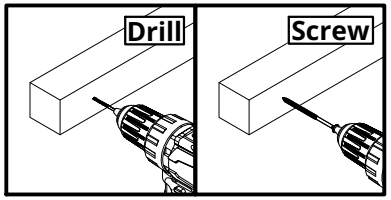

Use glue!

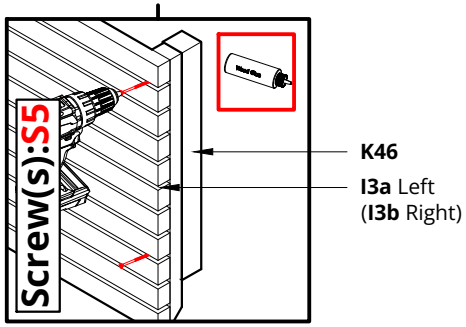

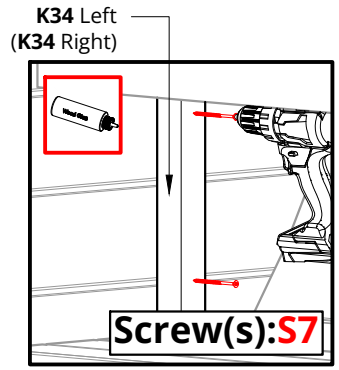

Screw(s)*	Name:	Quantity:
	S5	12

*Screw dimensions - Bench assembly detail list

Please countersink the screw head(s)!

Install the bench skirt(s)!
Repeat these steps on the other side as well!

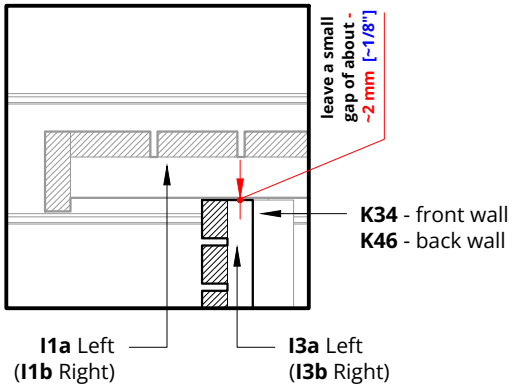

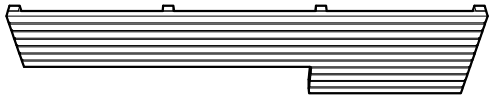

Bench skirt **I3a** Right

Bench skirt **I3b** Right

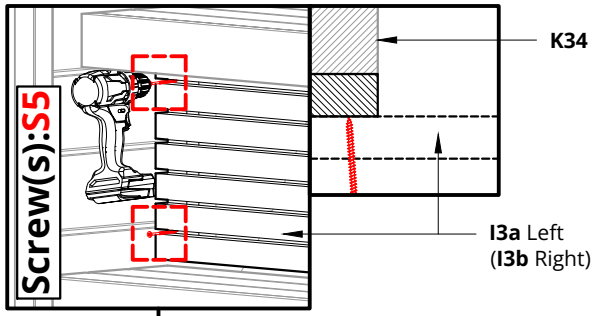

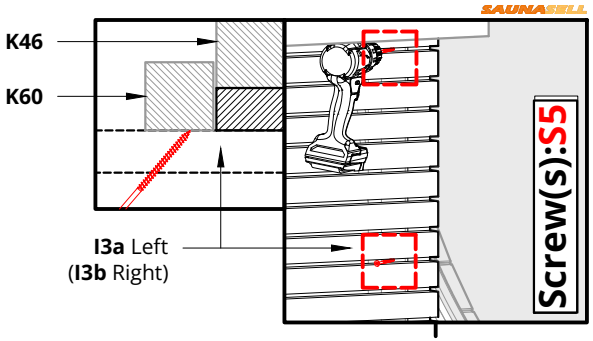

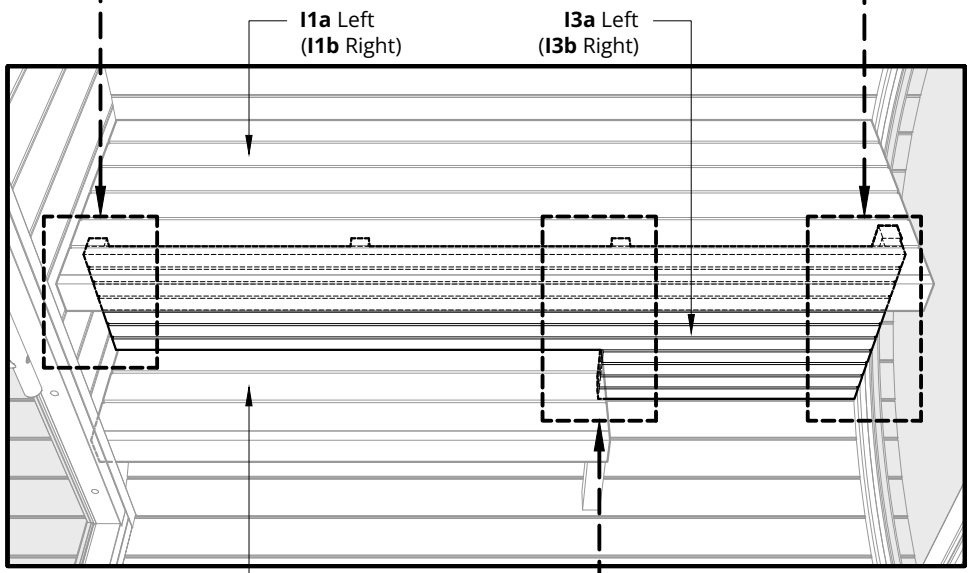

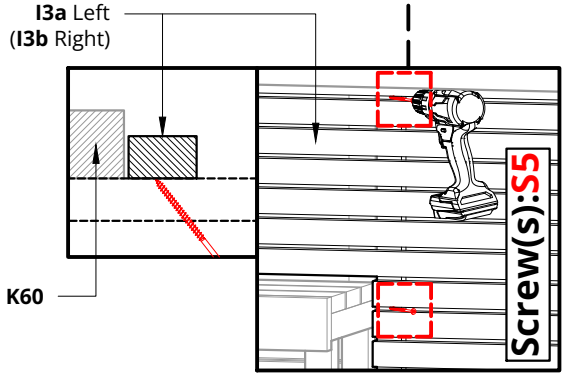

Screw(s)*	Name:	Quantity:
	S2	18

*Screw dimensions - Bench assembly detail list

NB! use a level

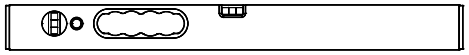

Installation is suitable for all wall options!

Install the bench backrest boards 3 pieces on the left and right sides!
Cover the screw pocket holes with plugs!

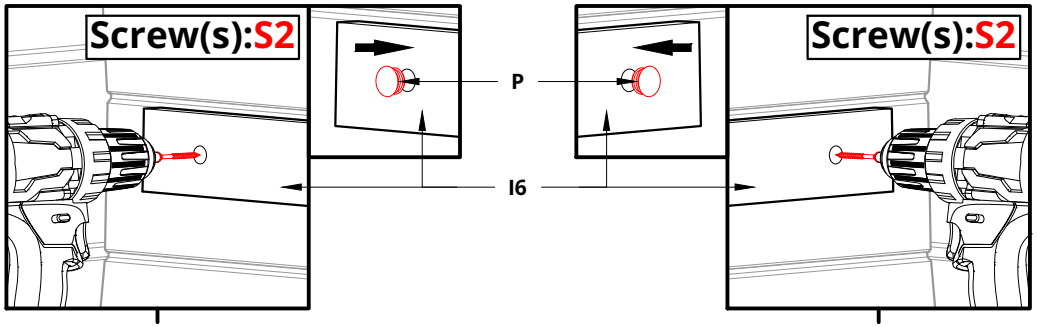

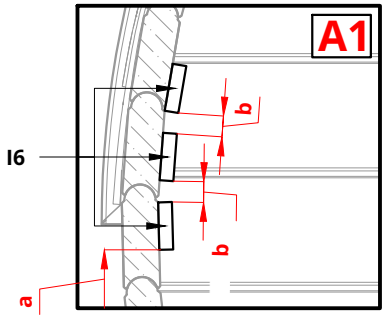

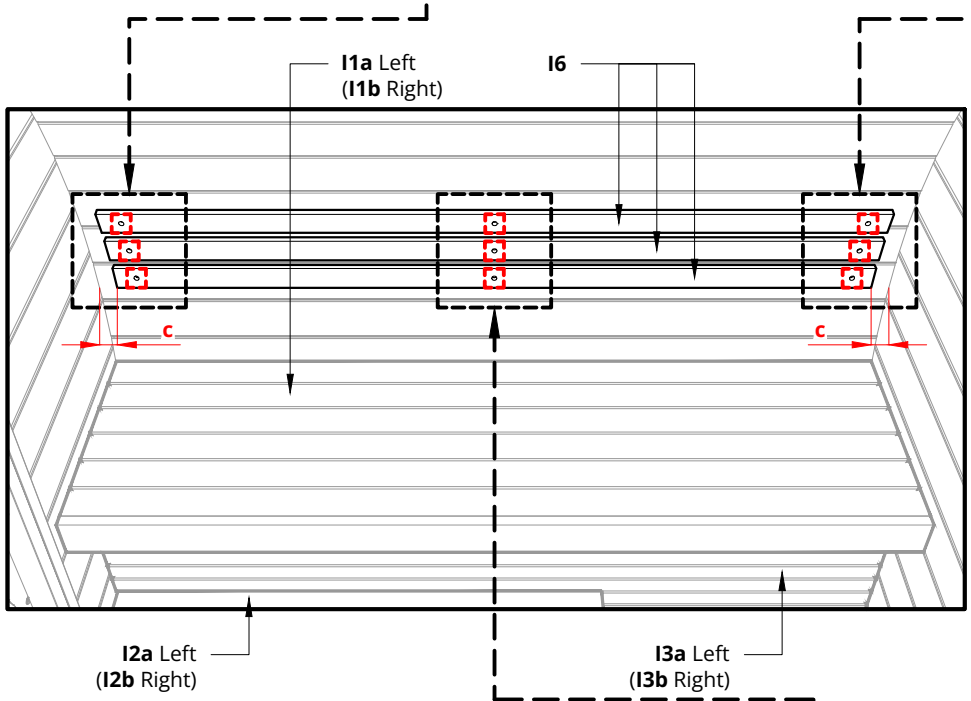

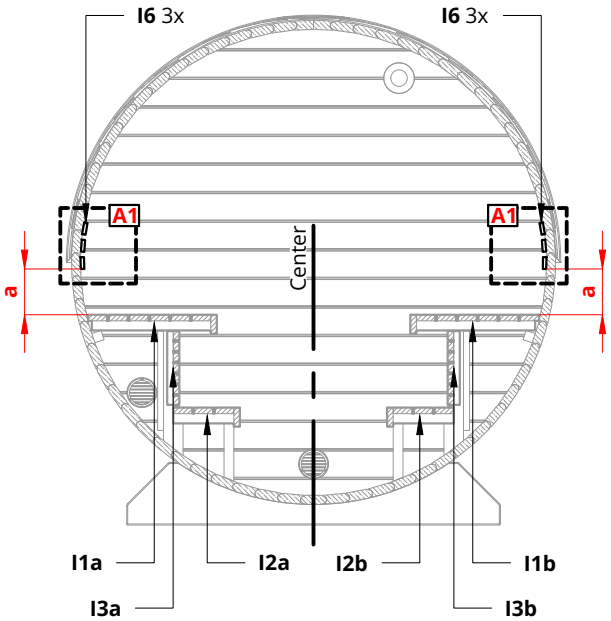

Dimensions and measurements		
*a	212 mm	~ 0'-8 5/16"
*b	26 mm	~ 0'-1 1/16"
c	~50 mm	~ 0'-1 15/16"

*** Recommended!!!**

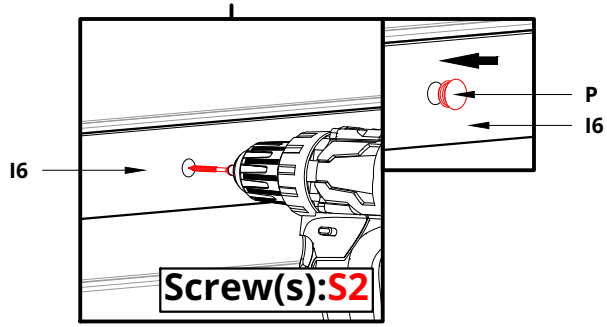

Lerra SAUNA SERIES

Installation is suitable for all wall options!

Install floor grates!
First install the longer floor grate I4!

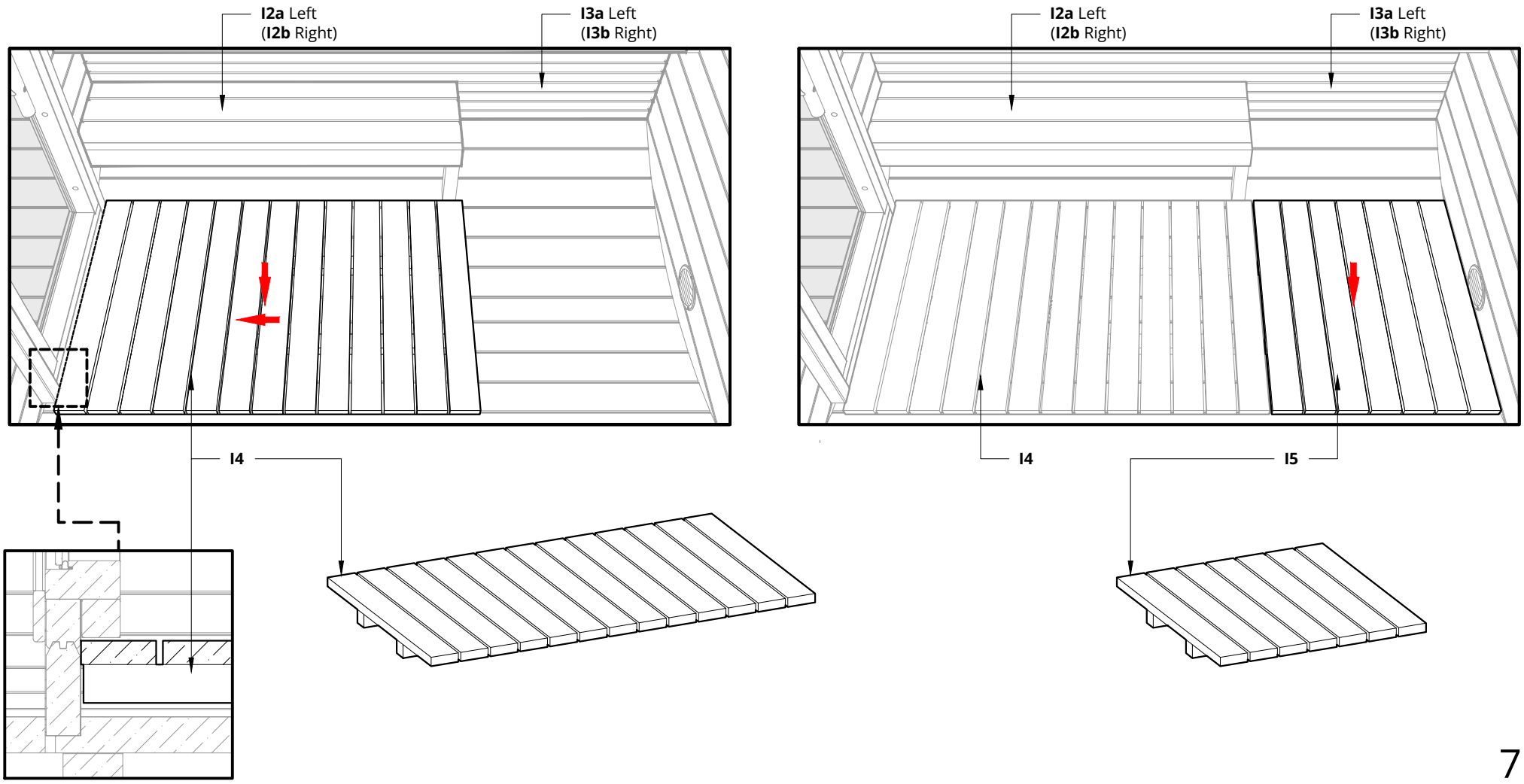

Lerra SAUNA SERIES

Screw(s)*	Name:	Quantity:
	S7	4

*Screw dimensions - Bench assembly detail list

NB! use a level

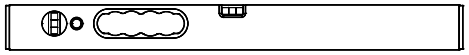

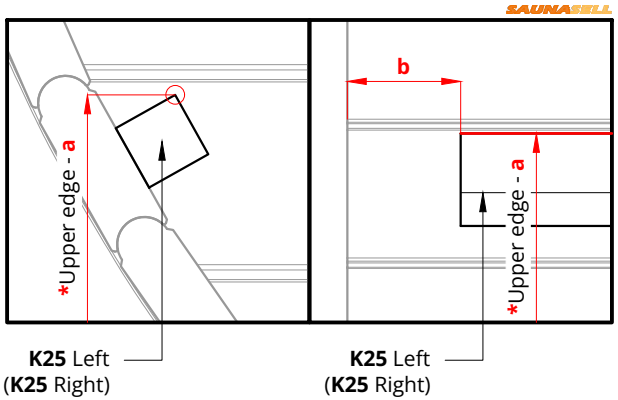

Please countersink the screw head(s)!
Measured from the center board of the floor!
Use glue between the square wood K... and the wall!

Install square woods for benches!

Dimensions and measurements		
a	593 mm	~ 1'-11 3/8"
b	75 mm	~ 0'-2 15/16"

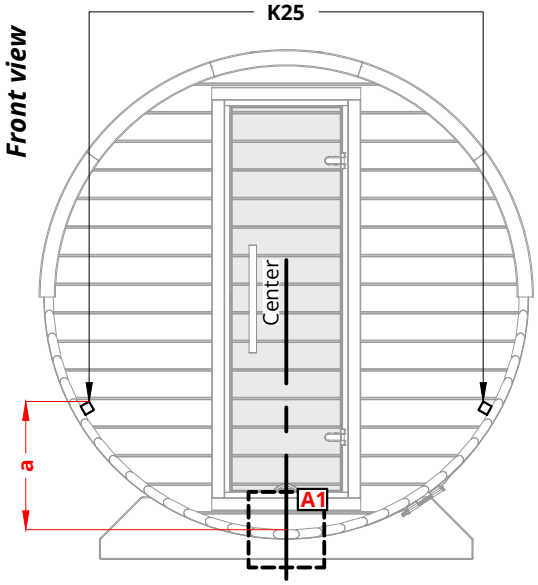

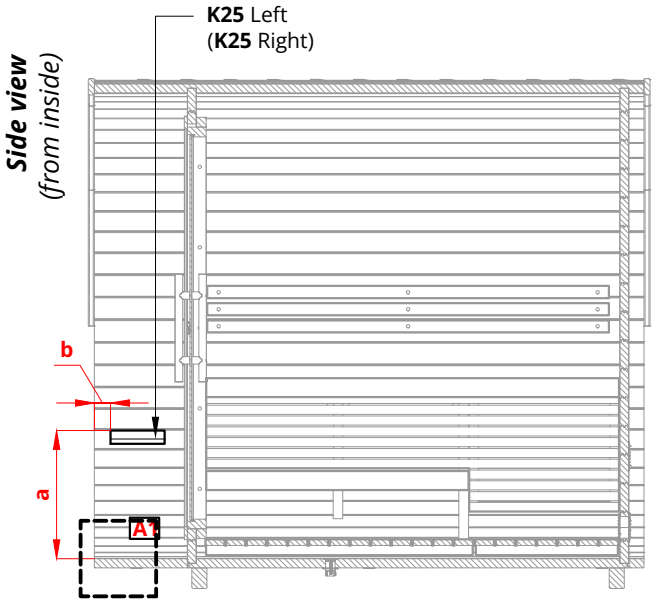

Front view

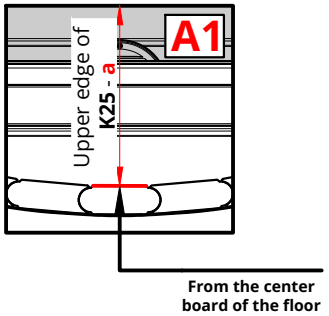

Notice!
Drill 4mm hole in the K... square woods before screwing.

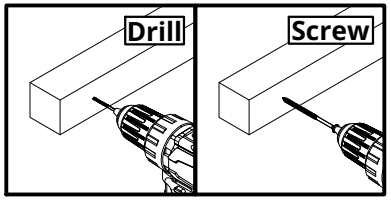

Use glue!

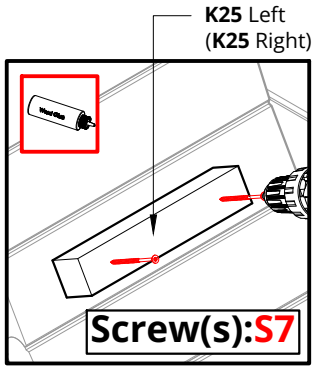

Lerra SAUNA SERIES

Screw(s)*	Name:	Quantity:
	S7	4
	S5	2

*Screw dimensions - Bench assembly detail list

NB! use a level

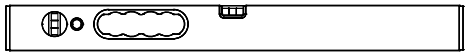

Please countersink the screw head(s)!

Install the Lower bench!
Install some supports to keep the bench level!
Measure the length for the bench leg(s)!
Cut the bench leg board(s) L1 to the correct size!

Length *- see the detailed list for measurements*

Bench leg(s) **L1 4x**

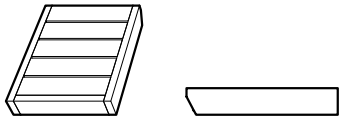

Bench **I7** Left and Right

Notice!

Drill 4mm hole in the K... square woods before screwing.

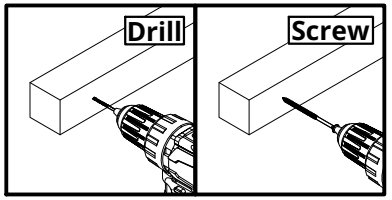

Use glue!

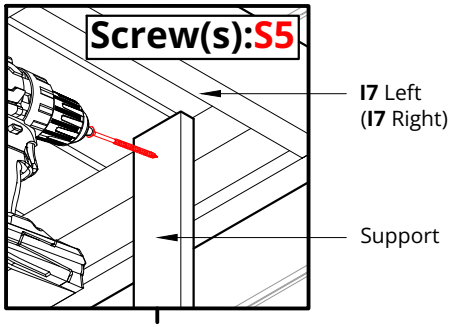

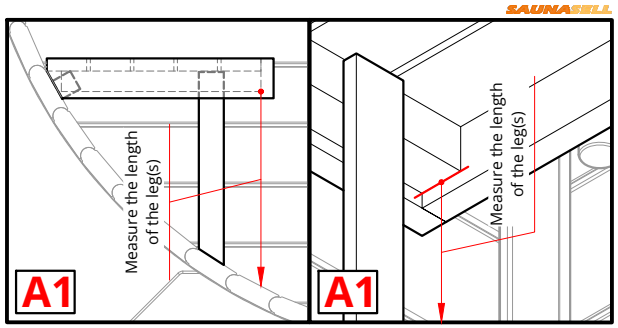

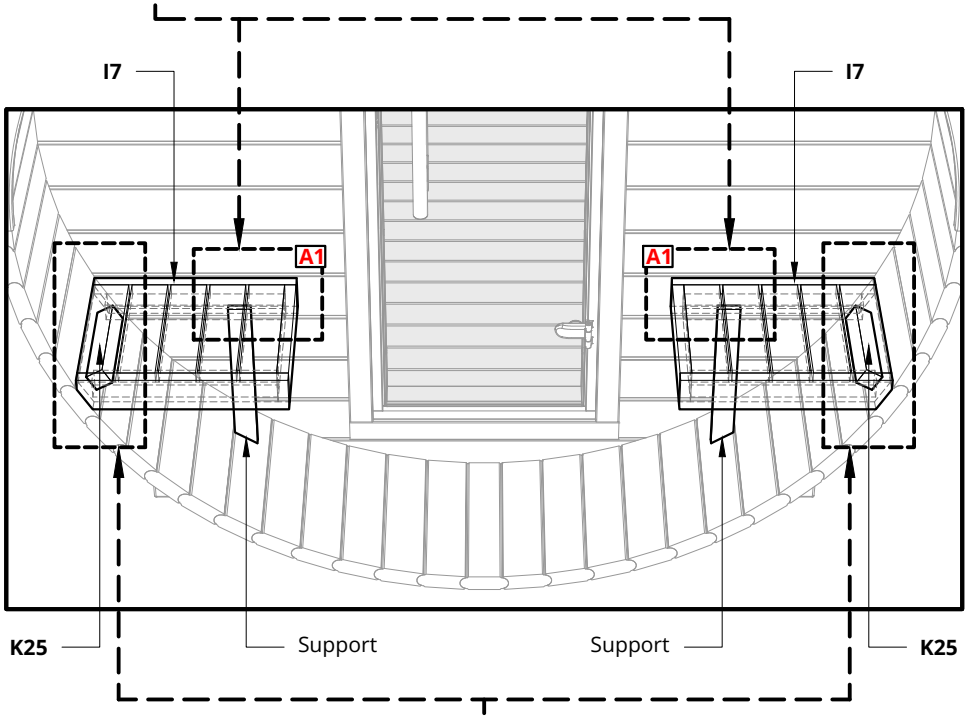

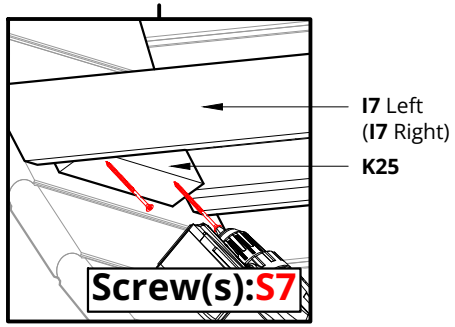

Lerra SAUNA SERIES

Screw(s)*	Name:	Quantity:
	S7	4
	S5	16

*Screw dimensions - Bench assembly detail list

NB! use a level

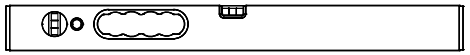

Please countersink the screw head(s)!

Install the first leg(s) L1 of the bench!
Remove supports and install second bench leg L1!
Repeat these steps on the other side as well!

Place the floor grate on the floor and fasten it to the floor!

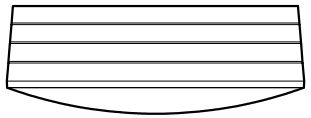

Floor grate **I8**

Notice!

Drill 4mm hole in the K... square woods before screwing.

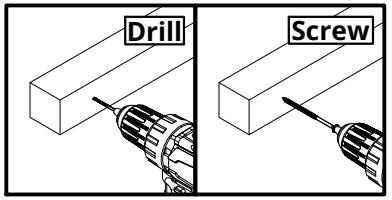
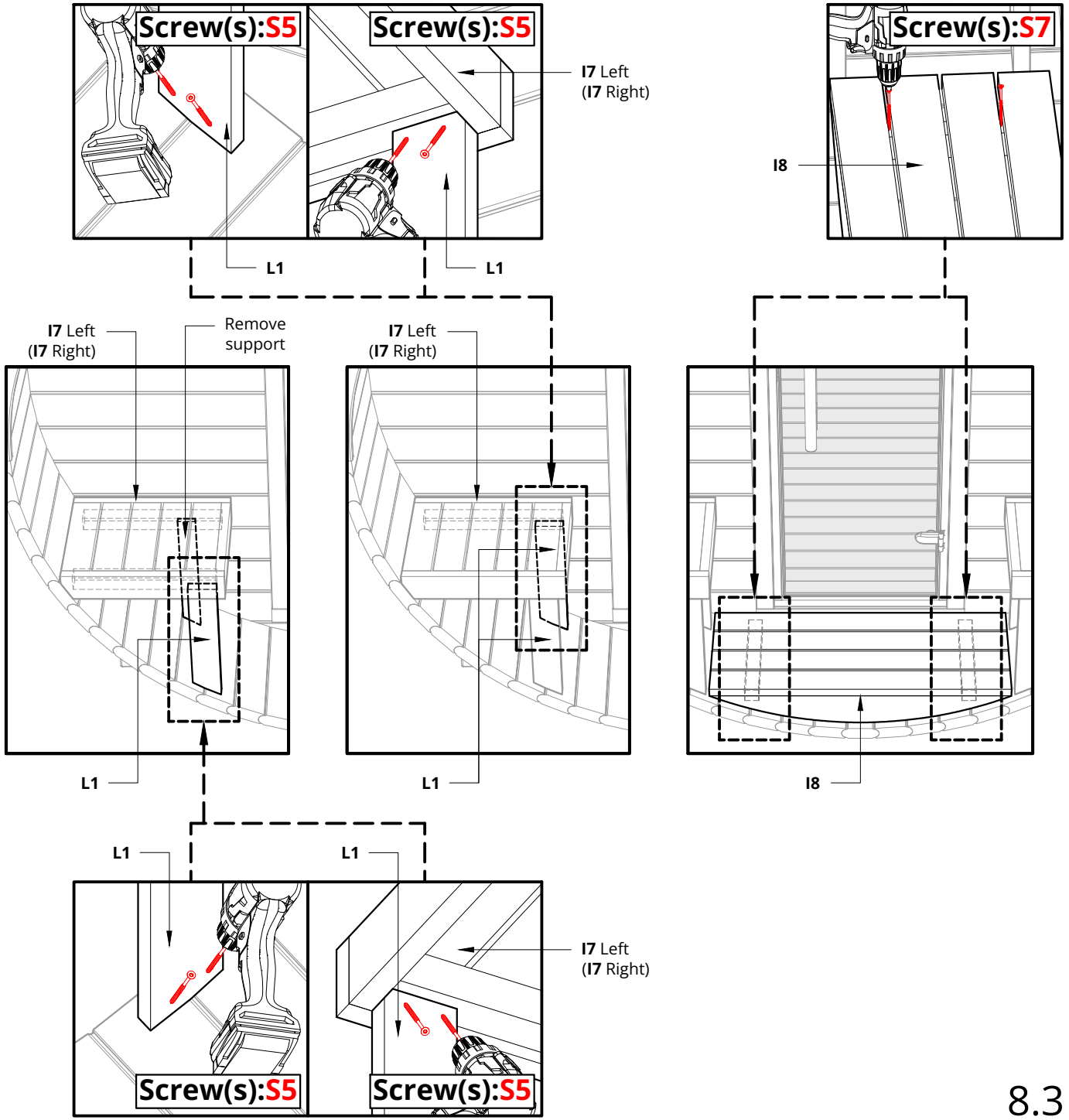
Use glue!